TRUCKEE MEADOWS Regional Stormwater Quality Management Program

The Truckee Meadows Structural Controls Design Manual

Kennedy/Jenks Consultants

April 2007 Update

Truckee Meadows Structural Controls Design Manual, April 2007 Update

UPDATES AND ERRATA

#1 - 29 April 2008

Amend the BMP fact sheets in Section 6 of the above noted manual as follows:

- Section 6: Change all instances of Ph to pH.
- Page 6-21, Figure TC-20C. Side View. Bottom right text should read "1.5 inch Class **D** backfill Stone or Gravel"
- Page 6-30, first bullet, insert after filter fabric: "or a pea gravel layer"
- Page 6-31, second bullet should read **5-20%** "Peat Moss of Certified Compost"
- Page 6-33, Figure TC-30. All schematics should read "**5-20%** Peat Moss of Certified Compost"
- Page 6-50, second bullet should read "4H:1V" or flatter.
- Page 6-79, eighth bullet should read "See figures TC-64D and 64E."

Table of Contents

List of Tables ..... *iii*

List of Figures ..... *iii*

List of Appendices ..... *v*

Acknowledgements ..... *vi*

List of Acronyms ..... *viii*

Glossary ..... *x*

Section 1: Introduction

1.0 Historical Background 1-1
1.1 Purpose and Organization of the Manual 1-1
1.2 Program Area 1-3
1.3 Relationship to Other Manuals and Handbooks 1-3
1.4 Updates and Revisions 1-3
1.5 Comments and Distribution 1-4
1.6 Disclaimer 1-4

Section 2: Storm Water Quality Management

2.0 Environmental Impacts of Untreated Urban Storm Water Runoff 2-1
2.1 Storm Water Pollution and the Truckee Meadows 2-3
2.2 NPDES Storm Water Permit Regulations 2-7
2.3 Permissable Non-Storm Water Discharges 2-9
2.4 Storm Water Quality Hydrology of the Truckee Meadows 2-10
2.5 Evaluating Pollutants of Concern 2-14
2.6 Identifying Candidate BMPs 2-14
2.7 Regional Treatment Controls 2-17
2.8 References and Additional Resource Information 2-18

Section 3: The Truckee Meadows Structural Controls Program

3.0 Legal Authority 3-1
3.1 Local Policies and Procedures 3-1
3.1.1 Public Reporting 3-2
3.1.2 Public Resources 3-3
3.2 Water Quality Design Criteria 3-4
3.2.1 Sizing Criteria for Flow-Based Storm Water Treatment Controls 3-5
3.2.2 Sizing Criteria for Volume-Based Storm Water Treatment Controls 3-6
3.2.3 Diversion Structures 3-9
Designing Weirs for Flow-Based Treatment Controls 3-12
Designing Weirs for Volume-Based Treatment Controls 3-13
Designing Orifices for Volume-Based Treatment Controls 3-13

Designing Bypass Pipes for Volume-Based Treatment Controls....3-14
3.2.4 Groundwater Recharge Considerations....3-17
3.2.5 Combining Volume and Flow-Based BMPs....3-18
3.2.6 Additional Storm Water Treatment Measures....3-18
3.2.7 Vector Controls....3-18

Section 4: Planning Principles and Site Design

4.0 Planning Principles....4-1
4.1 Site Design....4-2
SC-10 Roof Runoff Controls....4-3
SC-11 Efficient Irrigation....4-6
SC-12 Storm Drain Labeling....4-8

Section 5: Source Controls

5.0 Introduction....5-1
5.1 Commercial/Industrial Area BMPs....5-1
SC-20 Outdoor Material Storage....5-2
SC-21 Outdoor Material Loading/Unloading....5-4
SC-22 Fueling Areas....5-6
SC-23 Outdoor Work, Maintenance and Wash Areas....5-8
SC-24 Spill Prevention, Containment and Cleanup....5-10
SC-25 Waste Handling and Disposal....5-12
5.2 Multi-Family Area BMPs....5-14
SC-30 Vehicle Wash Areas....5-15
SC-31 Waste Handling Areas....5-16

Section 6: Public Domain Treatment Controls

6.0 Introduction....6-1
6.1 Vegetative Treatment Systems....6-2
TC-10 Vegetative Swales....6-3
TC-11 Vegetative Buffer Strips....6-8
6.2 Infiltration Systems....6-13
TC-20 Infiltration Trenches....6-14
TC-21 Infiltration Basins....6-21
6.3 Bioretention Systems....6-26
TC-30 Landscape Detention....6-27
6.4 Extended Detention Basins....6-31
TC-40 Sedimentation Basins....6-32
TC-41 Sand Filter Basins....6-40
6.5 Storm Water Ponds and Wetlands....6-44
TC-50 Storm Water Ponds....6-45
TC-51 Storm Water Wetlands....6-49
6.6 Media Filtration Systems....6-53
TC-60 Surface Sand Filter....6-54
TC-61 Underground Sand Filter....6-60
6.7 Porous Pavement
TC-62(a) Porous Pavement Detention....6-70
TC-62(b) Open-Celled Block Paving....6-75
TC-62(c) Open-Jointed Block Paving....6-80

TC-62(c) Porous Concrete and Asphalt Pavement.....6-85
TC-62(c) Porous Turf 6-89
TC-62(c) Porous Gravel.....6-93
TC-62(c) Open-Celled Plastic Grids.....6-97
6.8 Oil and Water Separators.....6-106
TC-70 Oil and Water Separators.....6-107

Section 7: Manufactured (Proprietary) Treatment Controls

7.0 Introduction 7-1
MTC-10 Hydrodynamic Separators.....7-2
MTC-20 Wet Vaults.....7-6
MTC-30 Catch Basin Inserts 7-12
MTC-40 Modular Wetlands 7-17
MTC-50 Media Filtration Systems.....7-20
MTC-60 Landscape Filtration Systems 7-26
MTC-70 Gross Solids Removal Device..... 7-30

List of Tables

2-1 Pollutants Commonly Found in Urban Runoff
2-2 Period of Record General Climate Summary – Precipitation, Reno WSFO Airport
2-3 Anticipated and Potential Pollutants Generated by Land Use Type
3-1 Runoff coefficients for the Rational Method
3-2 Manning Roughness Coefficients for Open Channels
TC-60A Sedimentation Basin Design Criteria
TC-60B Sand Filter Basin Design Criteria
TC-61A D.C. Type Underground Sand Filter Design Criteria
TC-61B Delaware Type Underground Sand Filter Design Criteria

List of Figures

2-1 The hydrographic response of urbanization within a hypothetical watershed
2-2 New Development in the Truckee Meadows from 1992 to 2002
2-3 Annual average concentrations of total nitrogen (TN) and total phosphorous (TN) measured on the Truckee River from Mogul to Lockwood (2000 to 2004).
2-4 Annual average concentrations of total dissolved solids (TDS) and Fecal Coliform measured on the Truckee River from Mogul to Lockwood (2000 to 2004).

2-5	Distribution of runoff producing storm events at the Reno Tahoe International Airport
2-6	Precipitation Frequency Analysis of the runoff producing storm events at the Reno Tahoe International Airport
3-1	Intensity-depth-duration curve for Region 1 of Sparks from the City of Sparks Hydrologic Criteria and Drainage Design Manual, 1998
3-2	Example of an underground pipe interceptor weir and/or orifice diversion structure for WQ_F or WQ_V treatment control measures
3-3	Example of a surface channel diversion structure for flow or volume based treatment controls
3-4	Example of an in-line underground sand filter with an overflow weir
3-5	Example of an in-line treatment control measure with a bypass pipe
SC-10	Example of a Sand Filter for roof runoff control
SC-12	Examples of storm drain labels
TC-10A	Typical design and structure of a Vegetated Swale
TC-10B	General design guidelines for a typical Vegetated Swale
TC-11	General design guidelines for a typical Vegetated Buffer Strip
TC-20A	Example of an Infiltration Trench with an energy dissipation device and a bypass structure
TC-20B	Example of a median strip Infiltration Trench with a grass buffer strip
TC-20C	Example of a parking lot Infiltration Trench with a grass buffer strip
TC-21	Example of a typical Infiltration Basin design
TC-30	Schematic of a Landscape Detention facility
TC-40A	Typical components of a Sedimentation Basin
TC-40B	Example design of a sedimentation basin embankment and outlet structure
TC-40C	Example sedimentation basin outlet structure #1 – vertical plate with multiple orifices
TC-40D	Example sedimentation basin outlet structure #2 – perforated pipe
TC-41	Example of a Sand Filter Basin design
TC-50	Example of a Storm Water Pond
TC-51	Example design of a Storm Water Wetland
TC-60	Conceptual Surface Sand Filter design
TC-61A	Example of a D.C. type Underground Sand Filter
TC-61B	Cross-section of a D.C. type Underground Sand Filter
TC-61C	Example of a Delaware type Underground Sand Filter
TC-61D	Cross-sections of a Delaware type Underground Sand Filter showing dimensional relationships
TC-64A	Typical roadway applications for Porous Pavement

TC-64B Cross-section of typical porous pavement installation and different types of porous pavement

TC-64C Typical porous pavement and drainage pipe configurations

TC-64D View of a paver block installation showing perimeter wall and contained cells

TC-64E Layout for underdrain system for porous pavement installations

TC-70A Example design and structural information for a typical oil and water separator

MTC-10A Vortechs

MTC-10B Downstream Defender™

MTC-10C CDS Separator

MTC-20A Type A System - BaySaver™

MTC-20B Type B System - Jensen StormVault™

MTC-20C Type C System - Stormceptor®

MTC-30A Examples of a basket type insert for a curb inlet catch basin and a box type insert for a vertical drop inlet

MTC-30B Example of a box type catch basin insert

MTC-30C Example of a box type insert for a curb inlet catch basin

MTC-40 Example of a modular wetland

MTC-50A Example of a vault type media filtration system

MTC-50B Example of a media filter cartridge

MTC-50C Example of a manhole media filtration system

MTC-50D Example of a catch basin media filtration system

MTC-60A Example of a landscape filtration system located between the street and the sidewalk

MTC-60B Example of a landscape filtration system with an underdrain to convey infiltrate to the storm drain system

MTC-70A Linear Radial Gross Solids Removal Device with an energy dissipating feature

MTC-70B Example of a Linear Radial Device

List of Appendices

A Structural Control Design and Selection Matrix

B Truckee Meadows Design Guidance Worksheets

C District Health Department Vector Control Standards

Acknowledgements

The Truckee Meadows Structural Controls Design Manual was prepared under a contract with the City of Reno on behalf of the Truckee Meadows Storm Water Permit Coordinating Committee with funding provided by the Regional Water Planning Commission. The storm water committee members involved in the development of the January 2004 edition of the manual were:

*Terri Svetich, P.E., Committee Chair
City of Reno, Sanitary Engineering

*Kimble Corbridge, P.E.
Washoe County Engineering

Shawn Gooch
City of Sparks, Flood Control

Chris Ennes
Nevada Department of Transportation

*Susan Ball Rothe, City of Reno
Deputy City Attorney

* identifies the committee members also involved in the development of the April 2007 Update

This manual was developed to assist engineers, developers, contractors and City and County staff in the planning, design, construction, operation and maintenance of source and treatment controls for storm water quality improvement. Structural controls for water quality improvement are required at private and public development and redevelopment under the NPDES Municipal Stormwater Permit NVS000001. The Nevada Division of Environmental Protection (NDEP) issued this permit and the staff members responsible overseeing its implementation are:

Clifford Lawson, P.E.
NDEP, Bureau of Water Pollution Control

Steve McGoff, P.E.
NDEP, Bureau of Water Pollution Control

Others who attended the public meetings and workshops and were involved in the development of this manual include the following:

Andy Piplani, Peavine Construction
Angela Huefle, AMEC Infrastructure
Brendon Bennett, MacKay & Somps
Candice Siwarga, Granite Construction Company
Chris Robinson, P.E., City of Reno, Community Development
Claudia Chambers, Kelley Erosion Control
Debra Lemke, Huffman Control & Carpenter, Inc.
Dennis Crouch, Bright Development
Don Mahin, Washoe County
Don Vetter, Innerwest
Gabe Knox, Stantec Consulting
Gail Prockish, Washoe County Dept. of Water Resources
Gil Ellis, City of Reno, Environmental Control
Glen Daily, P.E., City of Reno, Public Works Department
Helen Godfrey, Kelley Erosion Control
Jeanne Ruefer, Washoe County Dept. of Water Resources

Jeff Jesch, CPESC, Hillside Development & Construction,
Jenny Francis, Washoe-Storey Conservation District
Jim Arden, Washoe-Storey Conservation District
Jim Davenport, Mountain West Consulting
Jim Shaffer, Washoe County District Health Department – Vector Control
Jim Smitherman, Washoe County Dept. of Water Resources
John Martini, P.E., City of Sparks
Judith Saurn, Washoe County District Health Department – Vector Control
Judy Pipkin, Peavine Construction
June Thomas, City of Reno
Keith Fegert, SunRoc Inc.
Kris Klein, P.E., Washoe County Engineering
Larry Fowler, Silver State Barricade
Lee Carson, City of Sparks, Environmental Control
Mark Hausner, Washoe-Storey Conservation District
Mark Sullivan, AGC
Mel Quenemoen, Storey County
Merlin Waite, Centrex Homes
Michael Rosen, United States Geological Survey
Mike Cavanaugh, Unlimited Concrete
Mike Widmer, Washoe County Dept. of Water Resources
Paul Urban, P.E., Washoe County Dept. of Water Resources
Penny Oteri, City of Reno, Environmental Control
Ray Foote, Unlimited Concrete
Robert Gottsacker, City of Reno
Ryan Bird, Sierra Pacific Power Company
Sara Peterson, Jensen Precast
Sarah Bergeron, Jensen Precast
Scott Monsen, Washoe County District Health Department – Vector Control
Scott Schoenfeld, P.E., Centex Homes
Susan Donaldson, Ph.D., Nevada Cooperative Extension
Susan Hood, Washoe County Dept. of Water Resources
Tim Rowe, United States Geological Survey
Toby Ebens, City of Sparks, Environmental Control
Tom Adams, Nevada Department of Transportation
Tom Hausner, Washoe-Storey Conservation District
Tom Walbom, Granite Construction Company
Trina Magoon, Stantec Consulting
Warren Call, Washoe County Regional Transportation Commission

The following staff at Kennedy/Jenks Consultants were involved in the preparation of the 2004 and 2007 editions of this manual (under Job Nos. 007012.02 and 0595036).: Chris Conway, CPSWQ, Christine Kirick, Lynn Orphan, P.E., Christian Heinbaugh, Susan Strachan, Ed Childers, P.E., Jim Litchfield, Chris Johnson, Ron Overmyer, Pat Hamilton, Maggie Hack, Karen Siegel, Chris Anderson, P.E., Jeanette Dubois and Karin Peternel.

In addition, Kennedy/Jenks would like to acknowledge the assistance of Ben Urbonas, P.E., with the Urban Drainage & Flood Control District, and Larry Johnson and Dal Hunter, PH.D., P.E. with Black Eagle Consulting.

List of Acronyms

AASHTO	American Association of State Highway and Transportation Officials
ASTM	American Society for Testing and Materials
BMP	Best Management Practice
CASQA	California Stormwater Quality Association
CFR	Code of Federal Regulations
cfs	Cubic Feet per Second
CWA	Clean Water Act
ECS	Evaporative Control Systems, Inc.
EPA	U.S. Environmental Protection Agency
LID	Low Impact Development
MDE	Maryland Department of the Environment
MEP	Maximum Extent Practicable
MIT	Minimum Inter-event Time
MS4	Municipal Separate Storm Sewer System
NDEP	Nevada Division of Environmental Protection
NDF	Nevada Division of Forestry
NDOT	Nevada Department of Transportation
NPDES	National Pollutant Discharge Elimination System
NRCS	National Resource Conservation Service
NURP	Nationwide Urban Runoff Program
NWS	National Weather Service
PAG	Professional Advisory Group
PAHs	Polycyclic aromatic hydrocarbons
PCBs	Polychlorinated biphenyls
PMF	Probable Maximum Flood
RSWQMP	Regional Stormwater Quality Management Program
RWPC	Regional Water Planning Commission
SPF	Standard Project Flood
SUSMP	Standard Urban Stormwater Mitigation Plan
SWPPP	Storm Water Pollution Prevention Plan
TMDL	Total Maximum Daily Load

TMWA	Truckee Meadows Water Authority
TSS	Total Suspended Solids
UDFCD	Urban Drainage and Flood Control District
UIC	Underground Injection Control
WQ_F	Water Quality Flow
WQ_V	Water Quality Volume
WRCC	Western Regional Climate Center
WSCD	Washoe Storey Conservation District

Glossary

Anti-Seep Collar: An impermeable diaphragm, usually of sheet metal or concrete, constructed within the zone of saturation along the conduit of a principal spillway or outlet, installed to prevent piping or seepage along the conduit.

Aquatic Bench: A 10 to 15 foot wide bench which is located around the inside perimeter of a permanent pool and is normally vegetated with aquatic plants; the goal is to provide pollutant removal and enhance safety in areas using storm water pond storm water practices.

Baffles: Guides, grids, grating or similar devices placed in a pond to deflect or regulate flow and create a longer flow path.

Berm: A shelf that breaks the continuity of a slope; a linear embankment or dike.

Best Available Technology Economically Achievable (BAT): Technology-based standard established by the Clean Water Act (CWA) as the most appropriate means available on a national basis for controlling the direct discharge of pollutants to waters of the United States.

Best Management Practices (BMPs): Schedules of activities, prohibitions of practices, maintenance procedures, structural devices and other management practices to prevent or reduce the discharge of pollutants to waters of the United States.

Biochemical Oxygen Demand (BOD): A measurement of the amount of oxygen utilized by the decomposition of organic material, over a specified time period (usually 5 days) in a water sample.

Biofilters: Grass depression areas such as engineered channels or swales that are used to collect and filter urban storm water.

Bioretention: A water quality practice that utilizes landscaping and soils to treat urban runoff by collecting it in shallow depressions, before filtering through a fabricated planting soil media.

Buffer: An area adjacent to a shoreline, wetland or stream where development is restricted or prohibited.

Check Dam: A small dam constructed in a swale or other small watercourse to decrease the stream flow velocity (by reducing the channel gradient), minimize channel scour, and promote deposition of sediment.

Clean Water Act (CWA): Formerly known as the Federal Water Pollution Act. Legislation, which provides statutory authority for both NPDES pretreatment and storm water programs.

Detention: The temporary storage of storm runoff in a storm water practice with the goals of controlling peak discharge rates and providing gravity settling of pollutants.

Detention Structure: A structure constructed for the purpose of temporary storage of stream flow or surface runoff and gradual release of stored water at controlled rates.

Discharge: The direct or indirect entry of storm water or non-storm water into the storm drain system or a receiving water body. This term can also reference the pollutants being discharged from an activity or operation into storm water and/or non-storm water.

Drainage Area: An area that contributes all precipitation falling within its boundaries to a single common or outflow point.

Energy Dissipator: A designed device such as an apron of rip-rap or a concrete structure placed at the end of a water transmitting apparatus such as pipe, paved ditch or paved chute for the purpose of reducing the velocity, energy and turbulence of the discharged water.

Erosion: Detachment and movement of soil or rock fragments by water, wind, ice or gravity.

Extended Detention: A storm water design feature that provides for the gradual release of a volume of water over a 12 to 48 hour interval in order to increase settling of urban pollutants and protect downstream channels from frequent storm events.

Filter Media: The sand, soil, or other organic material in a filtration device used to provide a permeable surface for pollutant and sediment removal.

Filter Strips: A vegetated area that treats sheetflow and/or interflow by removing sediment and other pollutants. The area may be grass-covered, forested or of mixed vegetative cover.

Fines (Soil): Generally refers to the silt and clay size particles in soil.

General Permit: An NPDES permit issued under 40 CFR 122.28 that authorizes a category of discharges under the CWA within a geographical area. A general permit is not specifically tailored for an individual discharger.

Hazardous Substance: Any substance, other than oil, which, when discharged in any quantities into waters of the U.S., presents an imminent and substantial danger to the public health or welfare, including but not limited to fish, shellfish, wildlife, shorelines and beaches (Section 311 of the CWA); identified by EPA as the pollutants listed under 40 CFR Part 116.

Heavy Metals: Metallic elements with high atomic weights (e.g. mercury, chromium, cadmium, arsenic, and lead) that can damage living things at low concentrations and tend to accumulate in the food chain.

Illicit Connections: Illegal and/or unauthorized connections that result in untreated wastewater discharges into storm drainage systems and receiving waters.

Illicit Discharge: Any discharge to a municipal separate storm sewer system that is not composed entirely of storm water, except for discharges allowed under an NPDES permit or waters used for certain emergency situations.

Impervious: The characteristic of a material, which prevents the infiltration or passage of liquid through it. This may apply to roads, streets, driveways, parking lots, rooftops, patios and sidewalks.

Infiltration Rate: The rate at which water percolates into the subsoil measured in inches per hour.

In-Line: A storm water management system designed to manage storm water in its original stream or drainage channel.

Manufactured (proprietary) treatment controls: Patented devices that are engineered, constructed and distributed by private companies.

Municipal Separate Storm Sewer System (MS4): A conveyance or system of conveyances (including roads with drainage systems, municipal streets, catch basins, curbs, gutters, ditches, man-made channels, or storm drains) owned and operated by a state, county, city, town, district, association, or other public body (created by or pursuant to state law) having jurisdiction over the disposal of sewage, industrial wastes, storm water, or other wastes, that discharges to waters of the United States. [40 CFR 122.26(b)(8)].

Municipal Storm water Permit: An NPDES permit issued to municipalities to regulate discharges from municipal separate storm sewers for compliance with EPA established water quality standards and/or to specify specific storm water control strategies.

National Pollutant Discharge Elimination System (NPDES): The national program for issuing, modifying, revoking and reissuing, terminating, monitoring and enforcing permits, and imposing and enforcing pretreatment requirements, under Sections 307, 318, 402, and 405 of the CWA.

Non-Point Source Pollution: Unlike pollution from industrial and sewage treatment plants, non-point source (NPS) pollution comes from many diffuse sources. NPS pollution is caused by rainfall or snowmelt moving over the ground that picks up and transports natural and human-made pollutants, finally depositing them into lakes, rivers, wetlands, coastal waters, and underground sources of drinking water. Common non-point sources are agriculture, forestry, urban, mining, construction, dams, channels, land disposal, saltwater intrusion, and city streets.

Non-Storm Water Discharges: Flows or discharges that are not entirely composed of storm water. These may include but are not limited to uncontaminated groundwater, natural springs, car washing, air conditioner condensate, and hydrant flushing water.

Non-Structural Storm Water Practices (or BMPs): Management practices and measures designed to reduce pollutant levels in storm water, which do not require extensive construction efforts, and promote pollutant reduction by eliminating the pollutant source.

Off-Line: A storm water management system designed to manage a storm event by diverting a percentage of storm water events from a stream or storm drainage system.

One Hundred Year Storm: A precipitation event, which occurs on average once every 100 years or statistically has a 1% chance on average of occurring in a given year.

Open Space: A portion of a development site, which is permanently set aside for public or private use and will not be developed with homes. The space may be used for passive or active recreation, or may be reserved to protect or buffer natural areas.

Ordinance: A law, a statute, a decree enacted by a municipal body, such as a city council or county commission. Ordinances often govern matters not already covered by state or federal laws (such as local zoning, safety and building regulations), but may also be used to require stricter standards in local communities than those imposed by state or federal law.

Organic Filter: A filtering practice that uses an organic medium such as peat or compost in the filter bed to filter storm water runoff.

Outfall: The point where water discharges from a conduit, pipe, or drain to a stream, river, lake or another waterbody.

Outlet: The point at which water discharges from a structure such as a basin, a trench or a concrete structure to another structure or a pipe or channel.

Overflow Chamber: A design feature of some on-line storm water treatment practices that captures larger flows than are not treated by the practice, and passes them to the storm drain system.

Peak Discharge (Flow Rate): The maximum instantaneous rate of flow during a storm, usually in reference to a specific design storm event.

Perennial Stream: A stream channel that has running water throughout the year.

Permeability: The rate of water movement through the soil column under saturated conditions.

Pervious: A property of a material that allows for the passage of liquid through it.

Point Source: Any discernible, confined, and discrete conveyance or container, including but not limited to, any pipe, ditch, channel, tunnel, conduit, well, or tank from which pollutants are or may be discharged. This term does not include return flows from irrigated agriculture or agricultural storm water runoff.

Pollutant: Dredged spoil, solid waste, incinerator residue, filter backwash, sewage, garbage, sewage sludge, munitions, chemical wastes, biological materials, radioactive materials, heat, wrecked or discarded equipment, rock, sand, dirt, and industrial, municipal, and agricultural waste discharged into water [40 CFR 122.2].

Porosity: Ratio of pore volume to total solids volume.

Porous Pavement: Permeable pavement surface with an underlying stone reservoir to temporarily store surface runoff before it infiltrates into the subsoil. It can be used to replace asphalt and concrete and can be used for driveways, parking lots and walkways.

Pretreatment: Techniques employed in storm water practices to provide storage or filtering to help trap coarse materials before they enter the system.

Public domain treatment controls: Devices/facilities that can be designed by an engineer and have been implemented and tested by numerous communities throughout the nation.

Rain Barrel: A temporary storage device connected to a roof downspout, typically including a hose attachment to allow for reuse of rooftop runoff.

Rational Method: Used to determine peak flow rates for drainage areas of 100 acres or less, and 25 acres or less where the composite runoff coefficient is 0.50 or less.

Recharge Rate: The annual amount of rainfall that contributes to groundwater.

Redevelopment: Land-disturbing activity that results in the addition or replacement of impervious surface area on an already developed site. This may include the expansion of a building footprint, changes that are not part of routine maintenance, change to or an addition of a structure, and any related land disturbing activities.

Retention: The amount of precipitation on a drainage area that does not escape as runoff. It is the difference between total precipitation and total runoff. It also refers to the amount of storm water that is retained in a treatment control and is not slowly released to the storm drain system.

Retrofit: The installation of a new storm water practice or the improvement of an existing one in a previously developed area.

Riparian: The land area that borders a stream or river and which directly affects and is affected by the water quality. This land area often coincides with the maximum water surface elevation of the 100-year storm.

Riser: A vertical pipe which extends from the bottom of a storm water treatment control that houses discharge control devices such as weirs, orifices or multiple perforations.

Runoff: That part of precipitation, snow melt, irrigation or wash water that runs off the land into the storm drain system, streams or other surface-waters.

Run-on: The flow of storm water from an upgradient area onto an area where potential pollutants may exist.

Sanitary Sewer: A pipe or conduit (sewer) intended to carry wastewater or water-borne wastes from homes, businesses, and industries to the publicly owned treatment works (POTW) facility.

Secondary Containment: A containment that is external and separate from the primary containment (concrete dike, wall, barrier, berm, bin, drum, or tank).

Sediment: Solid particulate material, both mineral and organic, that can be transported from its site of origin by air, water, gravity, or ice.

Sedimentation Chamber: A section of a storm water treatment control that provides for the settling out of relatively large sediment particles from suspension in storm water.

Setbacks: The minimum distance requirements for location of a structural storm water practice in relation to roads, wells, septic fields, other structures.

Sheet Flow: Water, usually storm runoff, flowing in a thin layer over the ground surface prior to the development of channelized flow.

Side Slopes: The slope of the sides of a channel, dam or embankment. It is customary to name the horizontal distance first, as 3H:1V, meaning a horizontal distance of 3 feet to 1 foot vertical.

Source controls: Measures and practices that emphasize reducing or eliminating pollutants in storm water runoff at their source by reducing runoff and potential pollutant exposure to rainfall and runoff.

Spillway: An open or closed channel, or both, used to safely convey excess water from a basin, pond or reservoir over a dam or embankment.

Stilling Basin: An open structure or excavation at the foot of an outfall, conduit, chute, drop, or spillway to reduce the energy of the descending stream of water.

Storm Water = Stormwater: Rain and snow melt runoff and drainage associated with precipitation events [40 CFR 122.26(b)(13)].

Storm Water Hot Spots: Land-uses or activities that generate highly contaminated runoff. Examples include fueling stations and airport de-icing facilities.

Storm Water Management: The process of collecting, conveying, storing, treating, and disposing of storm water to ensure control of the magnitude and frequency of runoff to minimize the hazards associated with flooding and the impact on water quality caused by manmade changes to the land.

Storm Water Pollution Prevention Plan (SWPPP): A written document that describes the activities required to control the discharge of pollutants in storm water and non-storm water runoff. It is intended to facilitate a process whereby the operator evaluates potential pollutant sources at the site and selects and implements appropriate BMPs.

Stream Buffers: Zones of variable width, which are located along both sides of a stream and are designed to provide a protective natural area along a stream corridor.

Structural Treatment Controls: Devices that are constructed to provide temporary storage and treatment of storm water runoff and non-storm water flows. They use physical, biological and/or chemical processes to remove pollutants that have already impacted storm water runoff and non-storm water flows.

Toe (of slope): Where the slope stops or levels out. Bottom of the slope.

Total Maximum Daily Load (TMDL): A tool for establishing the allowable loadings of a given pollutant in a surface water resource to meet predetermined water quality standards.

Total Suspended Solids (TSS): A measure of the filterable solids present in a water sample, as determined by the method specified in 40 CFR Part 136.

Trash Rack: Grill, grate or other device at the intake of a channel, pipe, drain or spillway for the purpose of preventing oversized debris from entering the structure.

Ultra-Urban: A region dominated by highly developed areas in which very little pervious surface exists.

Variance: A special allowance granted to a developer, which permits the use of designs different from the requirements of the current code.

Water Quality Standard: A law or regulation that consists of the beneficial use or uses of a waterbody, the numeric and narrative water quality criteria that are necessary to protect the use or uses of that particular waterbody, and an antidegradation statement.

Water Quality Flow Rate (WQ_F): The flow rate representing frequently occurring rainfall/runoff events determined using the Rational Method for the 2-year storm event and the drainage area connected to the BMP.

Water Quality Volume (WQ_V): The storage volume required to capture and treat 90% of the average annual storm water runoff events.

Watershed: All the land area that contributes runoff to a particular point along a waterway.

Sources:

The City of Reno Municipal Code, Section 12.16.820 Definitions.

The Storm water Manager's Resource Center, Glossary, http://www.stormwatercenter.net/

The U.S. Environmental Protection Agency, NPDES Glossary
http://cfpub.epa.gov/npdes/glossary.cfm

The U.S. Environmental Protection Agency, Terms of the Environment
http://www.epa.gov/OCEPAterms/nterms.html

Section 1

Introduction

Section 1: Introduction

1.0 Historical Background

The development of the Truckee Meadows Structural Controls Design Manual began in January 2000 when the Nevada Division of Environmental Protection (NDEP) issued a municipal storm water discharge permit to the City of Reno, the City of Sparks, Washoe County, and the Nevada Department of Transportation (NDOT). NDEP's permit, referred to hereinafter as the Truckee Meadows Municipal Permit, is a requirement of the National Pollutant Discharge Elimination System (NPDES) storm water program administered by the U.S. Environmental Protection Agency (U.S. EPA). One of the requirements of the Truckee Meadows Municipal Permit was the development and implementation of a Regional Storm Water Quality Management Program (RSWQMP) that provided a framework for reducing pollutants in municipal storm water discharges to the Truckee River, its tributaries, and the playa lakes of the north valleys. The RSWQMP was finalized and adopted by the Cities, the County, NDOT in September 2001.

The Truckee Meadows Storm Water Permit Coordinating Committee, which consists of representatives from the Cities, the County, NDOT, is responsible for managing the implementation of the RSWQMP. The RSWQMP calls for the development of nine program elements to address the requirements of the Truckee Meadows Municipal Permit, including a program to implement storm water quality improvement structures and landscape design features (a.k.a. structural controls and Low Impact Development practices) in new development and redevelopment projects. Under this program each agency is responsible for their own ordinances, plan review, and inspection and maintenance of structural controls and LID practices within their jurisdiction. The program includes the development, adoption and implementation of a regional Structural Controls Design Manual. This manual has been developed for the City of Reno, the City of Sparks and Washoe County, with funding provided by the Regional Water Planning Commission.

In February 2003, the Storm Water Permit Coordinating Committee began the process of developing a regional Structural Controls Design Guidance Manual. To develop the manual, the committee conducted a series of public meetings and workshops to discuss the following:

- The NDEP and the U.S. EPA requirements for a local program;
- Structural Controls Programs and Storm Water Design Guidance Manuals in other communities;
- The preferred format of the manual and the recommended suite of structural controls for the Truckee Meadows;
- Development of performance standards and local policies and procedures;
- Concurrent activities of the NDEP and the U.S. EPA, other related local programs; and
- Comments and concerns of the general public.

These elements were incorporated into the January 2004 edition of the Truckee Meadows Structural Controls Design Manual. The fourth permittee of the 2000 Truckee Meadows Municipal Permit, NDOT, independently developed its own design guidance for structural controls at NDOT owned properties and projects throughout Nevada. NDOT's design guidance for structural controls were approved and finalized in 2004 and are presented within the NDOT Planning and Design Guide which can be accessed online at:

http://www.nevadadot.com/reports_pubs/Water_Quality/pdfs/PDG_AppendixB.pdf

http://www.nevadadot.com/reports_pubs/Water_Quality/pdfs/PDG_AppendixC.pdf

Per the five year permit cycle of the NPDES program, NDEP issued the next Truckee Meadows Municipal Permit in January 2005. The permittees of the 2005 permit are the City of Reno, the City of Sparks, and Washoe County. NDOT was issued a separate statewide NDPES permit by NDEP. However, NDOT continues to be actively involved in Storm Water Permit Coordinating Committee meetings and regional NPDES permit compliance issues.

In August 2005, the Storm Water Permit Coordinating Committee developed a Draft Low Impact Development (LID) Handbook that included recommended policies and procedures for structural treatment controls and LID practices. The Draft LID Handbook also included additional design guidance information LID practices such as vegetated swales, bioretention basins and porous pavements, which has been incorporated into the April 2007 Update of the Structural Controls Design Manual.

The April 2007 update of the Structural Controls Design Manual also provides additional information on the water quality of the Truckee River and significant updated design guidance and information on public domain and manufactured structural treatment controls. The April 2007 update of the manual is intended to provide information about the latest advancements and scientific understanding of structural treatment controls, which will continue to evolve and expand in the coming years. For example, the April 2007 update includes seven (7) separate fact sheets on porous pavements, whereas the January 2004 edition of the manual included only one fact sheet on porous pavements. In addition, the April 2007 update of the manual includes a series of Design Guidance Worksheets for structural treatment controls and LID practices. The worksheets utilize Excel spreadsheets with write-protected design criteria from the manual to provide a tool to assist with the consistent design and review of proposed structural treatment controls and LID practices in the Truckee Meadows. The Design Guidance Worksheets are intended to be used by designers and submitted to agency staff to expedite the plan review process.

1.1 Purpose and Organization of the Manual

The primary purpose of the Truckee Meadows Structural Controls Design Manual is to provide general guidance for selecting and implementing source control and structural treatment control Best Management Practices (BMPs) to reduce the pollutants in runoff from areas of new development and redevelopment. The manual is intended to assist local users with the siting, design, operation and long-term maintenance of structural controls for improving the quality of storm water discharges. Some BMPs are also effective at reducing the volume and rate of storm water discharges and can assist with urban flood control. The Truckee Meadows Structural Controls Design Manual also provides information on the local policies and

procedures that have been developed by the permittees to meet the NPDES storm water permit requirements. Implementation of the source control and structural treatment control BMPs provided in this manual will reduce pollutant loads in storm water runoff, reduce erosion and sedimentation in creeks and streams, and improve the water quality of receiving waters. These BMPs also have the potential to increase groundwater recharge, assist with water conservation efforts, and reduce the potential for flooding.

The source controls and structural treatment controls presented in the manual were carefully selected to provide a wide variety of appropriate controls for use in the soils and climate of the Truckee Meadows. The intended users of the manual include developers, planners, design engineers, contractors, subcontractors, construction staff and City of Reno, City of Sparks and Washoe County staff involved in public and private site development and redevelopment projects. As noted previously, the Design Guidance Worksheets provided with the April 2004 update of the manual are intended to be used by designers and submitted to agency staff to expedite the plan review process, and as a tool to assist with the consistent design of proposed structural treatment controls and LID practices in the Truckee Meadows.

The Truckee Meadows Structural Controls Design Guidance Manual is organized as follows:

- Section 1 provides the history and purpose of the manual and its organization.
- Section 2 introduces the concept of storm water quality management, the environmental impacts of untreated urban runoff, the NPDES Stormwater Program, storm water quality hydrology, and an overview of structural controls.
- Section 3 provides guidance on the local policies and procedures and the required water quality design criteria for structural treatment controls and LID practices in the Truckee Meadows.
- Section 4 provides an introduction to planning principles and site design elements for roofs, parking lots, and streets.
- Section 5 provides general guidance information on source controls commercial areas, industrial facilities and multi-family developments.
- Section 6 provides general design guidance information on public domain structural treatment controls for a wide variety of urban and suburban developments.
- Section 7 provides general design guidance information on manufactured or proprietary structural treatment controls for storm water quality improvement.
- Appendix A provides Structural Control Design and Selection Matrices to assist designers with selecting public domain treatment controls based on site characteristics, storm water management needs, community and environmental factors and water quality goals.
- Appendix B provides example design calculations for selected theoretical structural treatment control designs and land uses.
- Appendix C provides hardcopy versions of the Truckee Meadows Design Guidance Worksheets (interactive versions are available at www.TMstormwater.com).

- Appendix D provides a copy of the District Health Department Vector Control Standards.

1.2 Program Area

The general program for the Truckee Meadows Structural Controls Design Manual is the area which consists of the Cities of Reno and Sparks and the adjacent urbanized areas in the southern portion of Washoe County. areas of new development and redevelopment within Per the municipal stormwater discharge permit issued jointly to the four permittees, the receiving waters subject to municipal stormwater discharges in the Truckee Meadows include the Truckee River, Silver Lake Playa, Swan Lake Playa, Whites Lake Playa and the tributaries that drain to these water bodies.

1.3 Relationship to Other Manuals and Handbooks

The Truckee Meadows Structural Controls Design Manual is intended to be used during the planning and design phase of new development and redevelopment projects. It should also be used as a general guidance document to assist owners with understanding the proper operation and long-term maintenance of their structural controls. During the design of source and structural treatment controls, the designer should cross-reference the appropriate jurisdictions drainage design manual to ensure consistent technical approaches and related policies and procedures. The current drainage design manuals that should be referenced include:

- City of Reno, Public Works Design Manual (2000 or the most current edition).
- City of Sparks, Hydrologic Criteria and Drainage Design Manual (2001 or the most current edition).
- Washoe County, Hydrologic Criteria and Drainage Design Manual (1996 or the most current edition).

During the construction phase of new development and redevelopment projects that disturb one or more acres of land, the Truckee Meadows Construction Site Best Management Practices Handbook should be used for guidance with permitting requirements and the proper use of erosion, sediment and waste controls.

1.4 Updates and Revisions

NDEP and EPA require the permittees to develop and implement a Structural Controls Program that reduces pollutants in storm water discharges to the Maximum Extent Practicable (MEP). Since the science and technology of storm water quality improvement is evolving and new and innovative structural controls continue to be developed, the permittees will periodically review and approve new or innovative structural controls to meet the MEP standard. New approved source and structural treatment controls may be periodically added to the regional storm water website **www.TMstormwater.com**. In addition, the permittees plan to review and update the Truckee Meadows Structural Controls Design Manual every five years. This schedule will ensure that the review and update process occurs at least once during each five-year NDEP stormwater permit cycle. The review process should consist of two tasks; a technical review of the new structural controls used locally, by other communities and recommended by the EPA; and a procedural review of how well the Structural Controls Design Manual is being

implemented in the Truckee Meadows. Developers, planners, design engineers and contractors, as well as agency review and inspection staff, should be consulted to determine potential deficiencies and to suggest improvements.

1.5 Comments and Distribution

Comments and questions on the Truckee Meadows Structural Controls Design Manual or the Regional Storm Water Quality Management Program may be directed to:

Ms. Terri Svetich, P.E.
Storm Water Program Coordinator
The City of Reno Public Works Department
P.O. Box 1900
Reno, Nevada 89505

Phone: (775) 334-2350

Fax: (775) 334-2490

Email: SvetichT@ci.reno.nv.us

Website: **www.TMstormwater.com**

1.6 Disclaimer

The Truckee Meadows Structural Controls Design Manual should be used as a general guidance document to aid with the siting, design, operation and long-term maintenance of source controls and structural treatment controls for storm water quality enhancement. The storm water quality controls described herein are intended to serve as Best Management Practices (BMPs) implemented to meet the MEP standard required by NDEP and EPA. They should be designed based on the water quality design criteria presented in the manual and implemented at areas of new development and redevelopment based on the policies and procedures of the appropriate jurisdiction. Many of the source controls and all of the structural treatment controls are to be designed by a registered professional engineer. Since it is not possible to provide design guidance for every type of application, the design engineer is encouraged to reference additional sources of information. Regular inspection and maintenance of structural controls is required in order for them operate as designed.

Since the science and technology of storm water quality improvement is evolving and new and innovative structural controls continue to be developed, the Truckee Meadows Structural Controls Design Manual will be a dynamic document that will be reviewed and updated periodically with new source and structural treatment controls and potentially new design criteria, local policies and procedures, and inspection and maintenance procedures. Therefore the design engineer will be responsible for using the most current version of the manual as well as the most current version of the appropriate jurisdictions drainage design manual. Storm water quality and quantity controls (drainage and flood control) should be planned and designed concurrently.

Section 2

Storm Water Quality Management

2.0 Environmental Impacts of Untreated Urban Storm Water Runoff

Urbanization and industrial activities have significantly altered the natural landscape of our Nation's watersheds. These activities have resulted in a decrease in the amount of stable pervious land surfaces with native vegetation, an increase in the amount of erosion and sediment transport, particularly during construction, and an increase in the rate, volume and pollutant loading of urban runoff. Figure 2-1 provides an example of the hydrographic response of urbanization within a hypothetical watershed. Runoff and peak flow rates increase in response to the development of impervious surfaces such as roofs, parking lots and roadways. Conventional storm drain systems designed to efficiently drain urbanized areas and rapidly transport storm water also help to increase peak flow rates. The reduction of natural land surfaces that previously infiltrated a portion of the annual rainfall into pervious soils and either recharged groundwater aquifers and slowly discharged to streams and rivers results in decreased baseflows and changes to stream channel morphology.

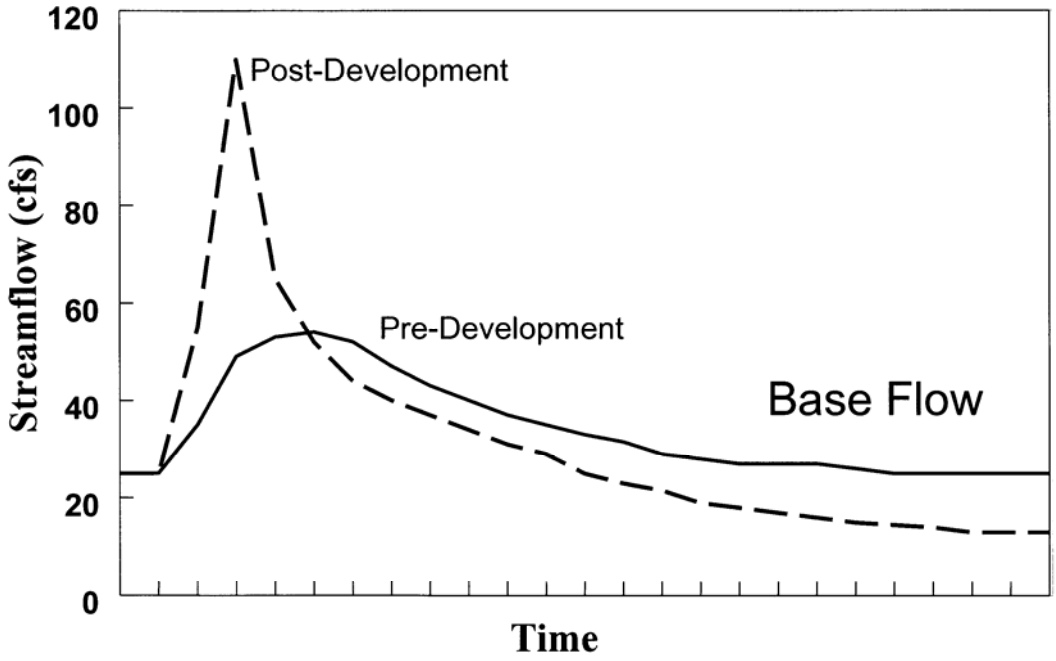

Figure 2-1. The hydrographic response of urbanization within a hypothetical watershed. Source: The Center for Watershed Protection

Urbanization also results in an influx of residential, commercial and industrial products and byproducts into urban and suburban areas. These materials are deposited on developed impervious surfaces by a variety of mechanisms and incorporated into storm water runoff as pollutants. Increased runoff and the transport of pollutants in storm water have adversely affected both the quantity and the quality of storm water runoff and have contributed to the chemical, physical, and biological impairment of the nations receiving waters. Studies, such as

the Nationwide Urban Runoff Program (NURP) study (U.S. EPA, 1983), have shown that storm water from urban, suburban and industrial areas commonly contains elevated levels of heavy metals, synthetic organics, pesticides, fuels, waste oils, and pathogens. The U.S. EPA has determined that this type of pollution, known as nonpoint source pollution or storm water pollution, is now the single largest cause of the deterioration of our nation's water quality (U.S. EPA, 1995). In addition, the American Cancer Society now estimates that one in every three Americans will develop cancer and the primary cause will be from environmental factors such as contaminated drinking water. Table 2-1 provides a general list of the types of pollutants commonly found in urban storm water, the major sources and their potential environmental impacts.

Table 2-1
Pollutants Commonly Found in Urban Runoff

Pollutant	Major Sources	Potential Effects
Nutrients • **Nitrogen** • **Phosphorus**	• Fertilizers • Animal Waste • Detergents • Atmospheric deposition • Leaking sewage pipes	• Lowers oxygen levels • Destroys habitat • Promotes algal blooms • Limits recreation • Interferes with navigation
Pathogens • **Bacteria** • **Viruses**	• Animal waste • Illicit connections between storm sewers and sewage lines • Leaking sewage pipes	• Poses human health risks • Closes beaches • Closes shellfish harvesting areas
Hydrocarbons • **Oil** • **Grease** • **Petroleum-based products** • **Polycyclic aromatic hydrocarbons (PAHs)**	• Parking Lots • Roads • Automobile emissions • Improper disposal of used motor oil • Illicit connections to drain systems	• Lowers levels of dissolved oxygen • Causes toxic impacts • Damages habitat
Toxic Organics • **Pesticides** • **Polychlorinated biphenyls (PCBs)**	• Lawn care • Agricultural lands • Industrial uses • Illicit connections to storm drain systems	• Causes toxic impacts • Leads to human and animal reproductive abnormalities • Increases animal mortality rates
Sediments	• Construction sites • Agricultural lands • Logged forest lands • Eroded streambanks	• Increases water turbidity (cloudiness) • Alters water flows • Destroys benthic habitat • Blocks sunlight • Attracts particulate forms of metals and nutrients

Table 2-1 Pollutants Commonly Found in Urban Runoff		
Pollutant	**Major Sources**	**Potential Effects**
Metals • **Lead** • **Copper** • **Cadmium** • **Zinc** • **Mercury** • **Chromium** • **Selenium** • **Nickel**	• Illicit storm drain connections • Automobile usage – emissions, brake pad residues • Atmospheric deposition • Industrial activities • Commercial activities	• Increases toxicity of sediment and water column • Adds toxics to food chain • Causes genetic defects, reproductive abnormalities and increased mortality rates among fish and wildlife • Increases risks of cancer, neurological disorders and birth defects among humans
Litter	• Human activities	• Aesthetic • Impairs recreational uses • Threatens aquatic life
Chlorides	• Outdoor storage and use of salts on roads, driveways and sidewalks in cold areas	• Toxic to freshwater organisms
Elevated Temperatures	• Industrial sources • Removal of trees next to streams and rivers • Impervious surfaces and conveyances	• Threat to insects, fish and other temperature sensitive aquatic species

Sources: Terrene Institute, 1996; U.S. EPA, 1995.

2.1 Storm Water Pollution and the Truckee Meadows

The Truckee Meadows is one of the fastest growing communities in the nation and new development over the past 20 years has been widespread. Economic incentives, climate and location have resulted in significant new development and redevelopment. Between 1992 and 2002 the population grew from approximately 270,000 to 360,000, a 33 percent increase. Based on information provided by the Washoe County Assessor's Office, 36,611 new parcels and 35,231 acres were developed from 1992 and 2002 (Figure 2-2). Over the next 20 years, the population is anticipated to grow by an additional 94,500 (State of Nevada, 2002).

The Truckee Meadows is located in a semi arid high desert area with an average annual precipitation of approximately 7.5 inches (WRCC, 2003). The Truckee River flows through the center of the Truckee Meadows and provides approximately 75% to 90% of the areas drinking water supply (TMWA, 2003). Most of the urban and suburban storm water runoff in the Truckee Meadows flows into the jurisdictions municipal storm drains and discharges to Truckee River and its tributaries untreated. Storm water runoff as well as regulated industrial discharges, treated wastewater and discharges from other sources in the Truckee Meadows all contribute pollutants loads to the Truckee River and its tributaries.

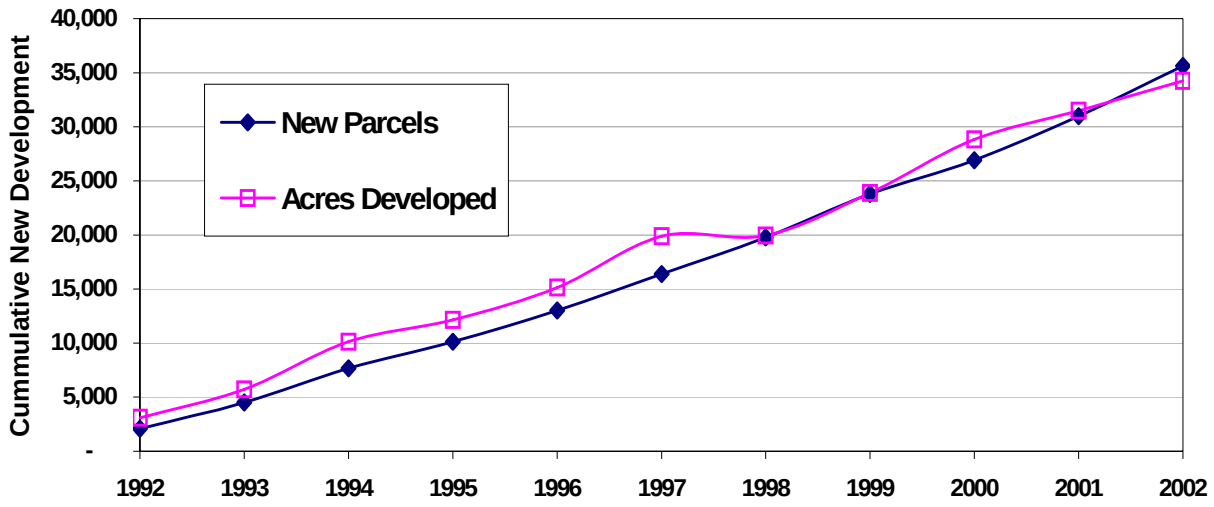

Figure 2-2. New Development in the Truckee Meadows from 1992 to 2002. Source: Washoe County Assessors Office, 2003.

Currently the Truckee River in and downstream of the Truckee Meadows is 303(d) listed for a number of pollutants of concern, including temperature, total phosphorous, and turbidity. Total Maximum Daily Loads (TMDLs) have also been established for total nitrogen (TN), total phosphorus (TP) and total dissolved solids (TDS) in the reach located between the eastern edge of the Truckee Meadows and the Pyramid Lake Reservation (NDEP, 2002). Downstream of the Truckee Meadows, the river flows to Pyramid Lake, a terminal lake that is the home to the Pyramid Lake Paiute Indian Tribe. The tribe has historically relied on the fishery of the lake and has been very active with environmental issues related to the water rights and water quality of the river.

As demonstrated in Figures 2-3 and 2-4, there are increased concentrations of various water quality constituents as the Truckee River travels through the Reno/Sparks urban area. In addition, the average annual concentrations of TN, TP, TDS and Fecal Coliform have increased between 2000 and 2004 (www.ndep.gov; www.tmwrf.com). These general trends are associated with numerous effects of urbanization, including increased storm water runoff. There are a number of studies linking increased watershed imperviousness to negative impacts on the hydrologic system such as flow alteration and degraded water quality. Resulting effects to river systems include sedimentation, increased water temperature, and loss of aquatic populations (Arnold et al., 1996; VanderWilt et al., 2003). The U.S. EPA presents a number of case studies (www.epa.gov/owow/nps/urbanize/report.html) which document the deleterious effects of increased urbanization on river ecosystems, including sedimentation and loss of fish populations. The use of macroinvertebrates as an indicator of stream water quality is widely used, as the presence, condition and quantity of fish, invertebrates and plants provide an indication about the health of a water body. Through the National Water Quality Assessment (NAWQA) program, the U.S. Geological Survey (USGS) collects macroinvertebrates, fish and water quality samples as baseline and continuing indicators of ecosystem health throughout the United States (USGS, 2003). As part of the NAWQA program, the USGS studied impacts from urban and mining activities on the Spokane River, finding less macroinvertebrate biological

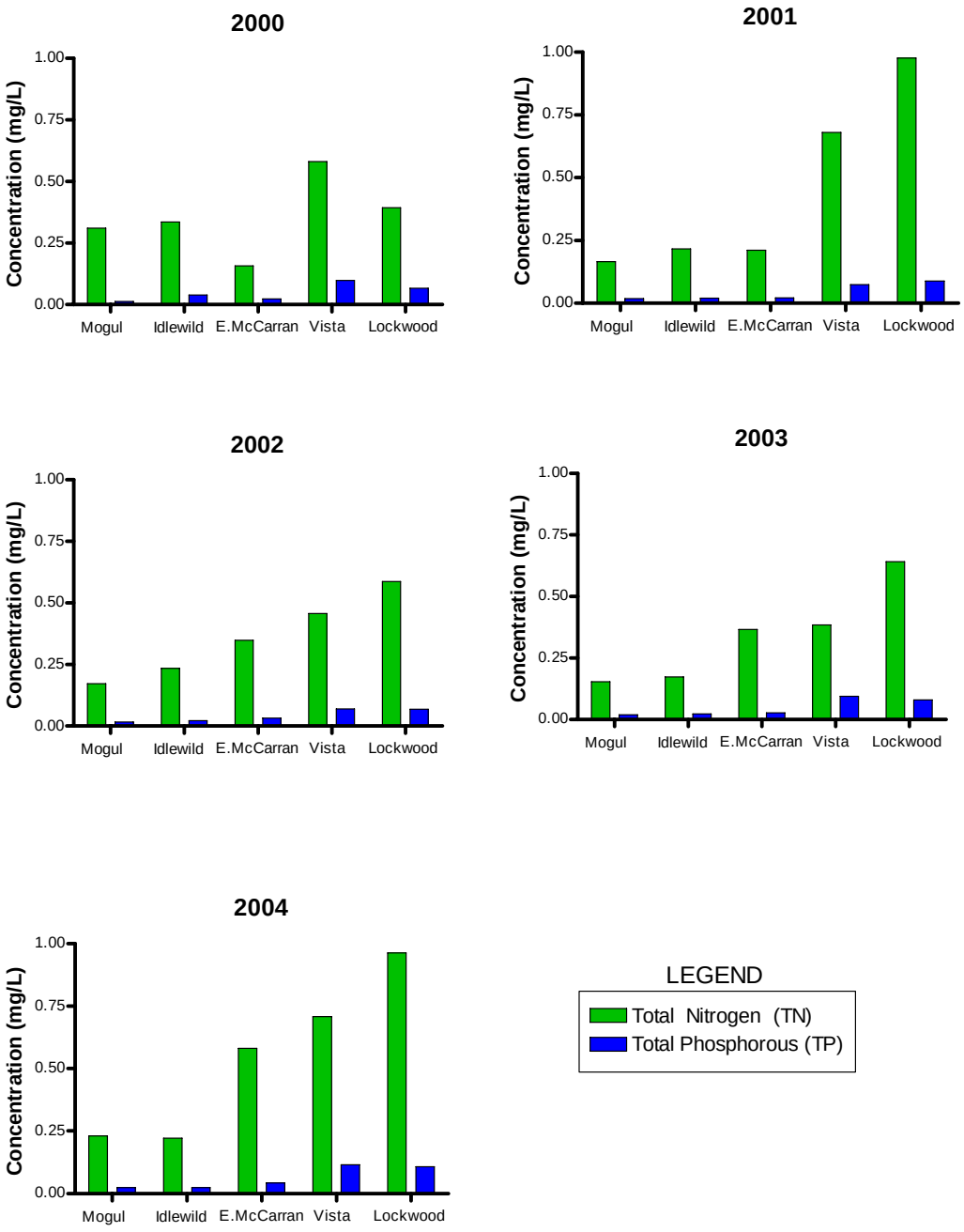

Figure 2-3. Annual average concentrations of total nitrogen (TN) and total phosphorous (TN) measured on the Truckee River from upstream of the Reno/Sparks urban area (at Mogul) to downstream of the of the Reno/Sparks urban area (at Lockwood). Data obtained from Nevada Division of Environmental Protection (NDEP) and Truckee Meadows Water Reclamation Facility (TMWRF).

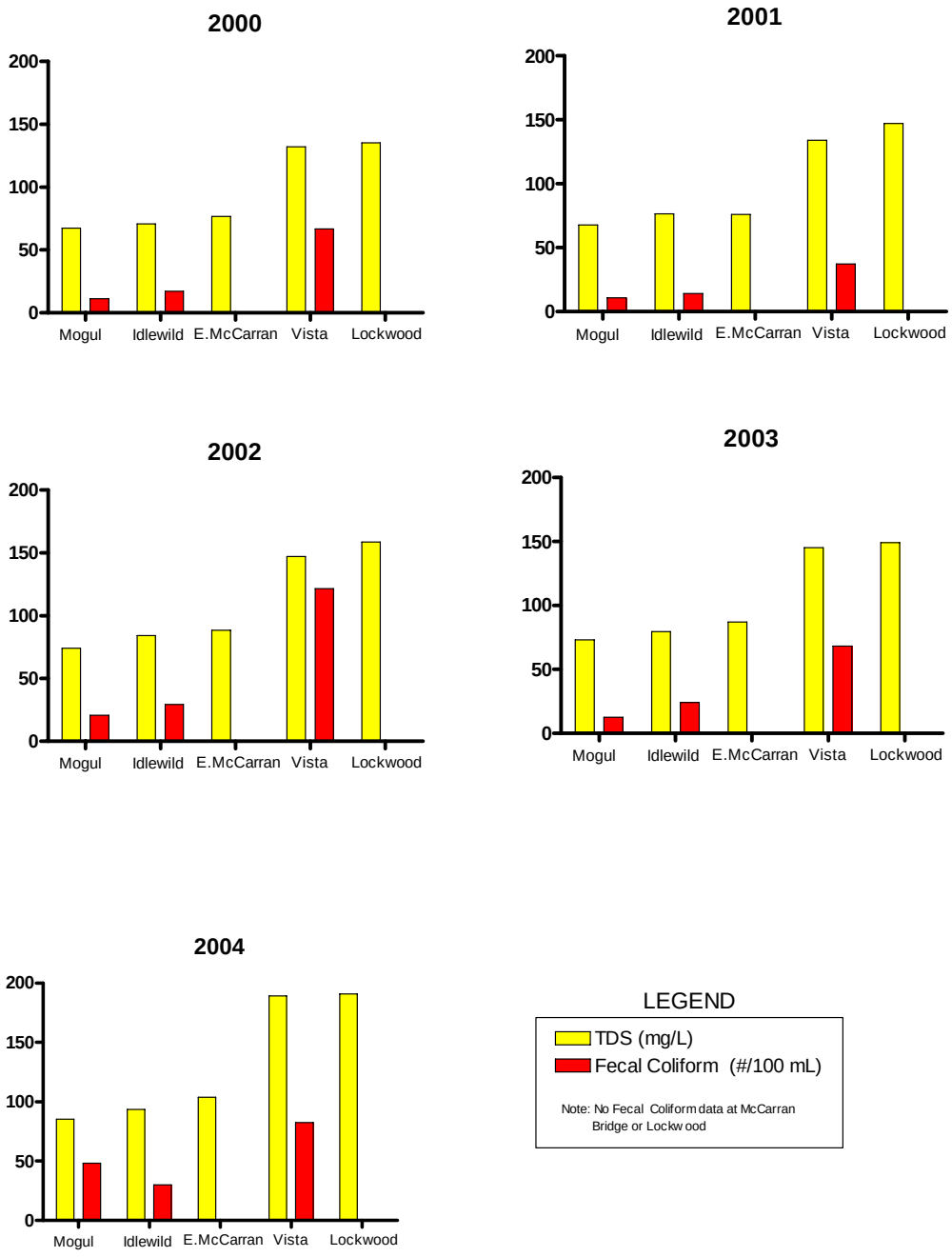

Figure 2-4. Annual average concentrations of total dissolved solids (TDS in mg/L) and Fecal Coliform (in #/100 mL) measured on the Truckee River from upstream of the Reno/Sparks urban area (at Mogul) to downstream of the of the Reno/Sparks urban area (at Lockwood). Data obtained from Nevada Division of Environmental Protection (NDEP) and Truckee Meadows Water Reclamation Facility (TMWRF).

integrity in impacted sites. In addition, the type and numbers of fish collected in the study also demonstrated poor biological integrity (USGS 2003). Lamphere et al. (2006) compiled fish and invertebrate data and degree of imperviousness in a watershed to assess impacts such as altered flow regimes and water quality degradation as a result of urbanization, finding that fish and invertebrates both exhibited a strong decline in biotic integrity as a result of urbanization. USGS Circular 1164 details a study using aquatic biologic communities to account for water quality problems as a result of urban runoff, spills, sewage overflows, and chemical contaminants, finding that fish in urbanized watersheds have lower Index of Biotic Integrity (IBI) which demonstrates poor biological condition.

Locally, macroinvertebrate and fish species have been collected on the Truckee River by the USGS upstream and downstream from the Reno/Sparks urban area since 1991 in an effort to evaluate river water quality and as part of the NAWQA program (Bevins and Kilroy, 1991; Lawrence and Seiler, 2002). Low quality physical and chemical habitat downstream from the Reno/Sparks urban area has had negative impacts on fish populations (Higgins et al., 2006). Higgins et al (2006) found a decline in biological integrity as the Truckee River travels through the Reno/Sparks urban area, with a reduction in fish species and abundance and a fish IBI score steadily decreasing from Verdi to Marble Bluff Dam (near Pryamid Lake).

2.2 NPDES Storm Water Permit Regulations

The Truckee Meadows Structural Controls Program is required under both the federal and state regulations (U.S. EPA and NDEP). In 1987, Congress amended the Federal Water Pollution Control Act (also known as the Clean Water Act) in order to protect receiving water bodies from the impacts of urban runoff. The amendments established a framework for regulating municipal and industrial discharges under the National Pollutant Discharge Elimination System (NPDES) program. According to the Clean Water Act mandate, municipalities regulated under the NPDES program must reduce pollutant loadings in municipal separate storm sewer systems (MS4s) to the “maximum extent practicable” (MEP) and must effectively prohibit non-storm water discharges through their MS4s as a first step toward achieving loading reductions consistent with applicable water quality standards (U.S. EPA, 1997).

Sources of storm water runoff that had the greatest potential to negatively impact water quality nationwide were addressed by Phase I of the NPDES Storm Water Program. Under Phase I, the U.S. EPA required NPDES permit coverage for storm water discharges from medium and large MS4s located in incorporated places or counties with populations of 100,000 or more. In EPA Region 9, the NPDES permit program, including storm water permitting, has been delegated to the states of California, Hawaii and Nevada (except for Indian lands in these states). In Nevada, the NPDES Storm Water Program permitting authority is NDEP.

The Storm Water Phase I Rule (55 CFR 47990; 16 November 1990) requires all operators of medium and large MS4s to obtain an NPDES permit and develop a storm water management program designed to prevent harmful pollutants from being washed by storm water runoff or dumped directly into the MS4 and then discharged into local water bodies. Per 40 CFR 122.26, large and medium MS4s, such as the Cities of Reno and Sparks and Washoe County, are required to:

- Provide a description of structural and source control measures to reduce pollutants from runoff from commercial and residential areas that are discharged from the MS4 that are to

be implemented during the life of the permit, accompanied with an estimate of the expected reduction of pollutant loads and a proposed schedule for implementing such controls.

At a minimum, the description shall include:

- A description of maintenance activities and a maintenance schedule for structural controls to reduce pollutants (including floatables) in discharges from MS4s;
- A description of planning procedures including a comprehensive master plan to develop, implement and enforce controls to reduce the discharge of pollutants from MS4s which receive discharges from areas of new development and significant redevelopment; and,
- A description of procedures to assure that flood management projects assess the impacts on the water quality of receiving water bodies and that existing structural flood control devices have been evaluated to determine if retrofitting the device to provide additional pollutant removal from storm water is feasible.

In March 2003, Phase II of the NPDES Storm Water Program became effective. Phase II extended coverage of the NPDES Storm Water Program by requiring permit coverage for storm water discharges from certain regulated small MS4s. In addition, Phase II lowered the threshold for regulation of construction activities from 5 acres to 1 acre of land disturbance. Per the Post-Construction Runoff Control Minimum Control Measure of the Phase II Final Rule, published in the Federal Register on 8 December 1999, small MS4 operators are required to:

- Develop and implement strategies which include a combination of structural and/or nonstructural best management practices (BMPs);
- Have an ordinance or other regulatory mechanism requiring the implementation of post-construction runoff controls to the extent allowable under State, Tribal or local law;
- Ensure adequate long-term operation and maintenance of treatment controls; and,
- Determine the appropriate BMPs and measurable goals for this minimum control measure.

Although primarily directed at small MS4s, the Phase II Final Rule provides additional language about what is required in the structural controls programs of all regulated MS4s in order to meet the MEP standard required under their NPDES storm water permits.

In regards to the State of Nevada requirements, Part I, Section A.3. of the Municipal Stormwater Discharge Permit (NVS000001) issued jointly to the permittees by the NDEP specifies that the Regional Program shall include:

- Structural Controls for Water Quality Improvements shall be considered for inclusion in site drainage plans, storm drain projects, and flood control projects where applicable; and,
- The Structural Controls Program shall control pollutants in stormwater to the Maximum Extent Practicable (MEP).

In addition, Part I.B.1.c. of the General Permit for Stormwater Associated with Construction Activity (NVR100000) requires:

A description of the measures that will be installed during the construction process to control pollutants in stormwater discharges that will occur after construction operations have been complete must be included in the SWPPP.

2.3 Permissible Non-Storm Water Discharges

Unless identified as contributing pollutants to the agencies storm drain system and/or the receiving waters of the U.S., the following non-storm water discharges or flows do not need to be regulated or treated (EPA, 2000).

- Water line flushing
- Landscape irrigation
- Diverted stream flows
- Rising ground waters and springs
- Uncontaminated ground water infiltration into the storm drain system
- Uncontaminated pumped ground water
- Discharges from potable water sources
- Foundation drains
- Air conditioning condensation
- Irrigation water
- Lawn and garden watering
- Water from crawl space pumps
- Footing drains
- Individual residential car washing
- Flows from riparian habitats and wetlands
- Dechlorinated swimming pool discharges
- Street wash water
- Discharges from fire-fighting activities
- Fire sprinkler testing water

As noted above, some of these non-storm water discharges or flows may require regulation, treatment, or elimination if they contribute pollutants to the storm drain system and/or the receiving waters of the U.S. For example, it is not permissible to wash spilled substances such as oil and grease from roadways into the storm drain system or directly into receiving waters. Although discharges from fire-fighting activities may contain significant pollutant concentrations,

NDEP and EPA consider this a relatively infrequent activity that is allowed to occur out of necessity to protect public health and safety.

2.4 Storm Water Quality Hydrology of the Truckee Meadows

As noted in Sections 2.0 and 2.1, urbanization in the Truckee Meadows has resulted in an increase in the volume of runoff, increased peak flows and sediment transport and the transport of a variety of pollutants in storm water runoff to the areas receiving waters. Although individually, residential homes or businesses typically contribute relatively small amounts of additional runoff and pollutants, collectively untreated storm water runoff from urban and suburban areas has been shown to have significant impacts on water resources.

The rate of runoff and the extent of pollutant loading depend on the hydrologic and geologic conditions, the types of land uses and the management practices implemented within the drainage area. Analyses of precipitation patterns across the country have shown that the relatively frequent small storm events, which wash urban surfaces much more often than the less frequent larger events, produce the vast majority of runoff containing pollutants. In addition, the majority of pollutants are typically transported during the “first flush” portion of a runoff event, which is often considered to be the first half-inch of runoff. Since pollutants tend to accumulate on urban surfaces over time, the first storm that occurs after an extended dry period (e.g. 7 days or more) also typically transports more pollutants than the successive storm events that occur during the passage of a storm system. Therefore, the sizing of treatment controls for storm water quality enhancement is most efficient and cost effective when they are designed to capture or convey and treat the most frequently occurring storm events as well as “first flush” portion of a the majority of runoff producing storm events.

Table 2-2 provides a general summary of precipitation and snowfall statistics for the Reno Tahoe International Airport from 1937 to 2003. The airport weather station receives an annual average of approximately 7.3 inches of precipitation (WRCC, 2003). Although the airport is located in one of the drier portions of the Truckee Meadows, the airport’s precipitation station is the most commonly used gauge for statistical analysis because it has the longest period of record and is the only official station that provides hourly rainfall data. A number of additional precipitation recording stations operated by the National Weather Service (NWS) and the Nevada Department of Transportation are located in and around the Truckee Meadows. In addition, there are a number of precipitation stations located in the watersheds surrounding the Truckee Meadows that are part of the ALERT early flood warning system. These stations indicate that parts of southwest Reno receive an annual average of approximately 12 inches of precipitation, while areas in the eastern foothills generally receive about 6.5 inches (Jim Ashby, WRCC, personal communication). Since the period of record for the other precipitation stations located in and around the Truckee Meadows varies and is insufficient, and the types of precipitation gauges also varies (e.g. hourly vs. daily total data), it is currently not possible to conduct a more detailed statistical analysis of precipitation in the Truckee Meadows. Therefore the precipitation data for the Reno Tahoe International Airport weather station currently provides the data for which sizing criteria have been developed for this manual.

Table 2-2

Period of Record General Climate Summary - Precipitation

Station:(266779) RENO WSFO AIRPORT
Period of Record = 1937 to 2003

	Storms*	Precipitation						Snowfall		
	Ave #	Mean (in)	High (in)	Year	Low (in)	Year	1 Day Max (in)	Mean (in)	High (in)	Year
January	3.9	1.12	4.13	69	0	66	2.29	5.4	22.9	93
February	3.1	0.97	4.84	86	0	67	1.8	4.9	23.5	69
March	3.4	0.76	2.87	95	0	88	1.09	3.9	29	52
April	2.0	0.42	2.04	58	0	59	1.56	1.2	7.5	58
May	2.4	0.60	2.89	63	0	43	1.76	0.8	14.1	64
June	2.0	0.43	1.53	89	0	46	0.64	0	0.2	95
July	1.0	0.26	1.06	71	0	42	0.80	0	0	37
August	1.3	0.24	1.65	65	0	37	0.95	0	0	37
September	1.4	0.34	2.31	82	0	43	0.80	0	1.5	82
October	1.5	0.41	2.14	45	0	54	1.46	0.3	5.1	71
November	2.5	0.73	3.08	83	0	48	1.64	2.2	16.5	85
December	3.1	1.01	5.25	55	0	89	2.02	4.3	25.6	71
Annual	27.7	7.28	13.23	83	1.55	47	2.29	22.8	63.8	71
Winter	10.1	3.10	8.36	56	0.32	48	2.29	14.5	50.2	93
Spring	7.8	1.79	5.08	95	0.23	37	1.76	5.9	29.9	64
Summer	4.4	0.93	3.31	65	0.05	66	0.95	0	0.2	95
Fall	5.4	1.47	5.67	82	0.04	59	1.64	2.5	17.7	85

***** Number of runoff producing storms (1948-2002, minimum 0.05" precipitation and 6-hr MIT assumed).

Source: Western Regional Climate Center http://www.wrcc.dri.edu

Precipitation analyses in the United States typically assume a 6-hour dry period (a.k.a. Minimum Inter-event Time or MIT) to separate storm events (Driscoll et. al., 1989). Analyses of runoff producing storm events also typically assume a minimum of 0.05 inches of precipitation is required to produce runoff. They assume that precipitation less than 0.05 inches that occurs during a period of time that is preceded by a 6-hour dry period will not produce runoff because this small amount of rainfall is retained in depression storage, infiltrated, and/or lost to evaporation.

Figure 2-5 presents an analysis of the observed distribution of storm events at the Reno Tahoe International Airport from 1948 to 2002 data assuming a 6-hour MIT. The data from 1937 to 1948 was not included in this analysis because it was not continuous. This analysis indicates that the majority of local storms produce less than 0.50 inches of total rainfall and as storm sizes increase, the total number of storms significantly decreases. Therefore, sizing structural treatment controls for the larger storm events (e.g. storms up to 1.50 inches) may significantly increase the size and cost of structural treatment controls, while the total number of additional storms treated is insignificant. In addition, structural treatment controls designed to capture and treat runoff from the larger storm events typically release smaller runoff volumes over a shorter period of time, providing inadequate detention and treatment of the runoff from the smaller storm events. This is the reason why flood control detention structures designed to detain runoff volumes for the 5, 25 or 100-year storm events typically provide only a limited amount of storm water quality treatment.

Figure 2-6 presents a precipitation frequency analysis for the Reno Tahoe International Airport. This analysis assumes a minimum depth of 0.05 inches of precipitation is required before runoff occurs and a minimum 6-hour dry period (MIT) is required to define a new storm event. As is typical with this type of analysis, the slope of the curve increases where the less frequent larger storm events begin to occur. The point of inflection, or the area on the curve where the magnitude of the storm events increases more rapidly than the corresponding number of events is known as the “knee of the curve.” The location of the knee of the curve varies depending on the climatic patterns and precipitation characteristics of the geographic area under analysis. For the Reno area, the knee of the curve is located between approximately the 85th and 95th percentile storm events, with the 90th percentile event located at approximately the midpoint of the knee of the curve (Figure 2-6).

A minimum 48-hour detention time is generally required in the Truckee Meadows area to provide adequate TSS removal. However, a 24-hour detention time may be permissible in drainage areas with coarse soils that readily settle and in watersheds where discharge of detained warm water may be detrimental to downstream fisheries.

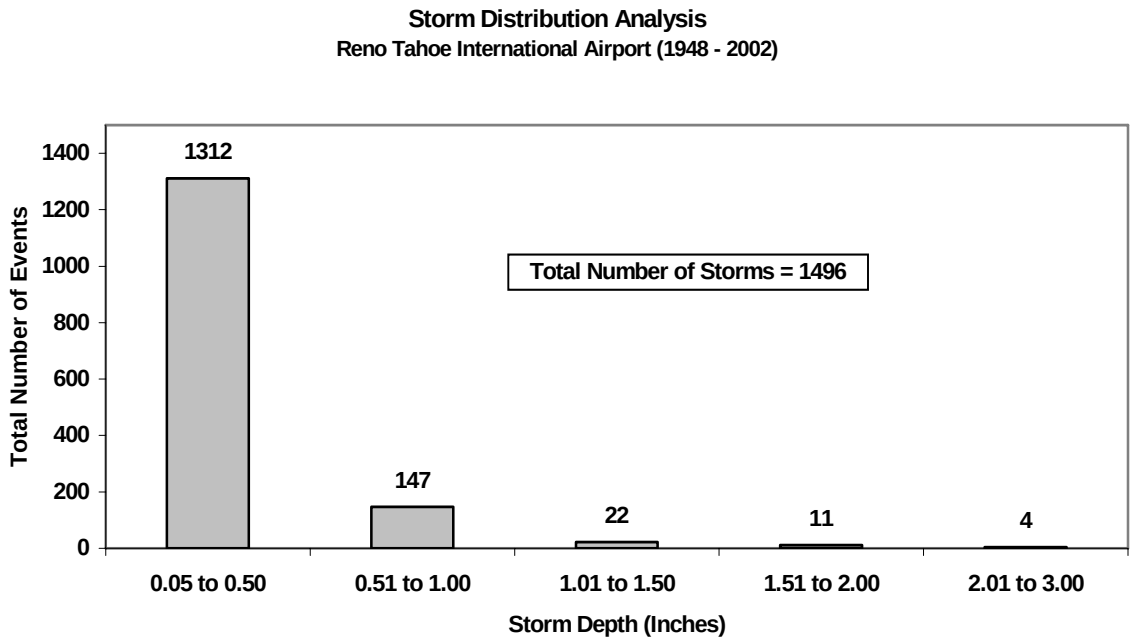

Figure 2-5. Distribution of runoff producing storm events at the Reno Tahoe International Airport (assuming a 6-hour MIT).

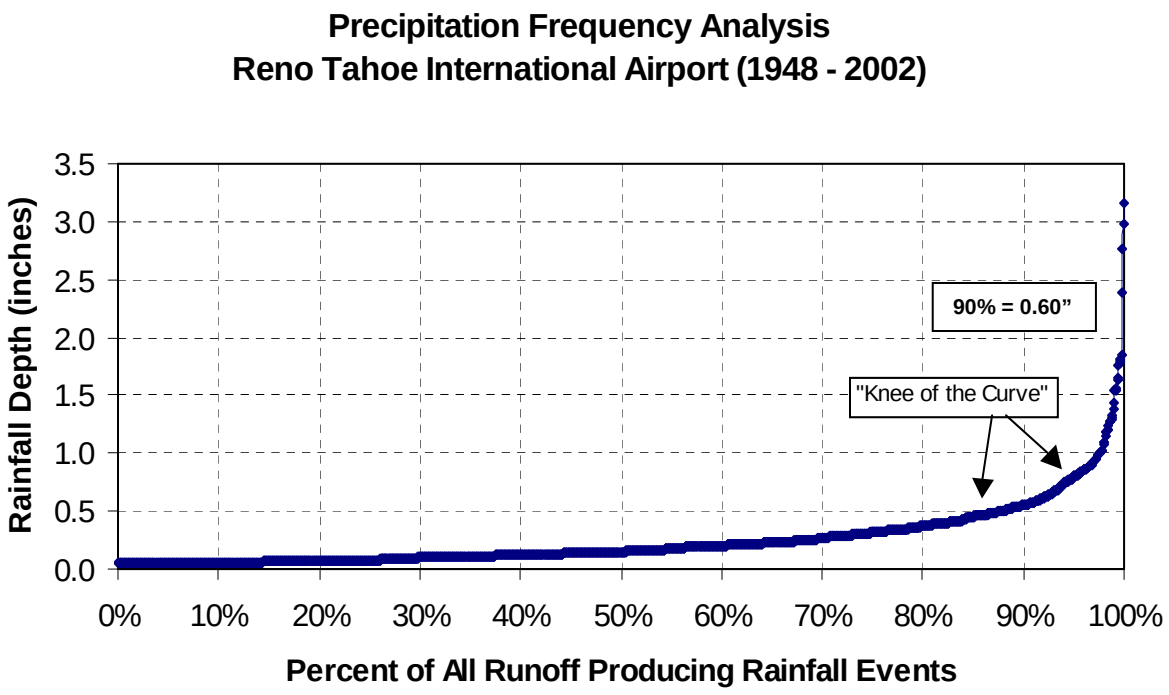

Figure 2-6. Precipitation Frequency Analysis of the runoff producing storm events at the Reno Tahoe International Airport (assuming a 6-hour MIT).

2.5 Evaluating Pollutants of Concern

Proper selection of source controls and structural treatment controls includes the identification of anticipated pollutants of concern for proposed new development and redevelopment projects. As noted in Section 2.1, the Truckee River in and downstream of the Truckee Meadows is 303(d) listed for a number of pollutants of concern, including temperature, total phosphorous, and turbidity. In addition TMDLs have been established for total nitrogen, total phosphorus and total dissolved solids in the river along the eastern edge and downstream of the Truckee Meadows. Therefore, at a minimum, the source controls and structural treatment controls selected for use in the Truckee Meadows should be designed to target these pollutants.

Urban and suburban storm water runoff also typically includes pollutants such as sediment, metals, bacteria (i.e., fecal coliform), pesticides, and trash. The most common metals found in urban and suburban storm water runoff include lead, copper, cadmium, zinc, mercury, chromium, selenium, and nickel. Table 2-3 provides a list of the anticipated and potential pollutants generated by several common urban land uses. To evaluate pollutants of concern and the appropriate source controls and/or structural treatment controls the project designer should reference Table 2-3 and consider the following:

- Receiving water quality and the pollutants for which those receiving waters are listed as impaired under Clean Water Act section 303(d),
- Land use type of the development project and pollutants associated with that land use type,
- Materials expected to be present on site that could become pollutants,
- Changes in storm water discharge flow rates, velocities, durations, and volumes resulting from the development project,
- Sensitivity of receiving waters to changes in storm water discharge flow rates, velocities, durations, and volumes.

The key to remember is that a pollutant need not be causing an immediate impairment when evaluating anticipated pollutants of concern.

2.6 Identifying Candidate BMPs

Selecting structural treatment controls based on pollutants of concern is a function of site constraints, constituents of concern, expected BMP performance, and watershed specific requirements such as TMDLs. Cost can become an important differentiator in BMP selection.

Large reductions in treatment BMP size and investment can be made by:

- Reducing runoff that needs to be captured, infiltrated, or treated, and,
- Controlling sources of pollutants.

Table 2-3 Anticipated and Potential Pollutants Generated by Land Use Type

Development Type	General Pollutant Catagories								
	Pathogens	Heavy Metals	Nutrients	Pesticides	Organic Compounds	Sediments	Trash & Debris	Oxygen Demanding Substances	Oil & Grease
Detached Residential Development	X		X	X		X	X	X	X
Attached Residential Development	P		X	X		X	X	P(1)	P(2)
Commercial / Industrial Development >100,000 ft^2	P(3)		P(1)	P(5)	P(2)	P(1)	X	P(5)	X
Automotive Repair Shops		X			X(4)(5)		X		X
Restaurants	X						X	X	X
Hillside Development >5,000 ft^2			X	X		X	X	X	X
Parking Lots		X	P(1)	P(2)		P(1)	X	P(5)	X
Streets, Highways & Freeways		X	P(1)		X(4)	X	X	P(5)	X

X = Anticipated

P = Potential

(1) A potential pollutant if landscaping exists onsite.

(2) A potential pollutant if the project includes uncovered parking areas.

(3) A potential pollutant if land use involves food or animal waste products.

(4) Including petroleum hydrocarbons.

(5) Including solvents.

Source: CASQA, 2003

These two strategies are the most effective in managing storm water quantity and quality. A third strategy includes implementation of structural treatment controls. BMP Fact Sheets for source control BMPs and public domain treatment control BMPs are included in Sections 5 and 6, respectively. Section 7 provides BMP Fact Sheets for selected Manufactured or Proprietary Treatment Controls that are currently commercially available.

Appendix A provides a Structural Control Design and Selection Matrix to assist site designers with the proper selection of the public domain treatment controls presented in Section 6. Matrix 1 indicates what types of treatment controls are applicable for a given type of land use. Matrix 2 provides a list of the physical design constraints that must be considered when siting public domain treatment controls. Matrix 3 indicates the potential storm water management capabilities of the treatment controls in addition to storm water quality enhancement. Matrix 4 provides a comparison of the community and environmental factors, such as ease of maintenance, safety considerations, and the potential for habitat creation, that are associated with public domain structural treatment controls. Matrix 5 provides a general summary of the expected pollutant removal effectiveness of the treatment controls presented in Section 6. More detailed information on pollutant removal effectiveness is provided on the individual BMP fact sheets presented in Section 6.

2.7 Regional Treatment Controls

Proposed and existing flood control detention basins can be modified to improve the quality of storm water discharges with the addition of storm water quality outlet structures, vegetated swales and storm water ponds and wetlands. Outlet structures, such as those presented on BMP Fact Sheet TC-40 Sedimentation Basins, can be incorporated into the design of flood control detention basins without changing the primary function of the structure. Storm water quality outlet structures designed to detain storm water runoff from the most frequently occurring storm events for an extended period of time allow suspended sediments and associated pollutants time to settle and collect in the basin. Vegetated swales can also be added as a pretreatment measure and can be incorporated into multiuse facilities. In areas where non-storm and dry weather flows produce a perennial flow into a flood control detention basins, storm water ponds and wetlands can be incorporated into the design to enhance water quality.

Since the continued use of catch basins with sumps that retain storm water for extended periods of time has become a public health concern (due to the concentrated breeding of mosquitoes), regional treatment of storm water with underground vaults may be considered in the municipal storm drain system of new developments and areas of redevelopment. In addition to providing storm water treatment, a single underground vault could potentially replace a number of catch basins with sumps and reduce municipal maintenance requirements.

2.8 References and Additional Resource Information

APWA, 1981. Urban Stormwater Management, Special Report No. 49, American Public Works Association Research Foundation.

Arnold Jr., Chester and Gibbons, James. " Impervious Surface Coverage." Journal of American Planning Association. Vol. 62 Issue 2 Spring, 1996.

California Stormwater Quality Association (CASQA), 2003. Stormwater Best Management Practice Handbook – New Development and Redevelopment.

City of Austin, 2003. Environmental Criteria Manual.

City of Boise, undated. Storm Water Management Design Manual.

City and County of Denver, 2000. Stormwater Quality Control Plans: An Information Guide.

City of Sacramento, 2000. Guidance Manual for Onsite Stormwater Quality Control Measures.

Driscoll, E., G. Palhegyi, E. Strecker, and P. Shelley. 1989. Analysis of Storm Event Characteristics for Selected Rainfall Gauges Throughout the United States.

Higgins, Daniel K., Tuttle, Peter L. and J. Scott Foote. 2006. Preliminary Assessment of Contaminants and Potential Effects to Fish of the Truckee River, Nevada. Submitted by U.S. Fish and Wildlife Service. Nevada Fish and Wildlife Office, for Environmental Contaminants Program.

Kennedy/Jenks Consultants, 2003. Truckee Meadows Construction Site Best Management Practice Handbook. Truckee Meadows Regional Stormwater Quality Management Program. Prepared for the City of Reno, the City of Sparks and Washoe County.

Kennedy/Jenks Consultants, 2001. Truckee Meadows Regional Stormwater Quality Management Program, prepared for the Truckee Meadows Interlocal Stormwater Committee and the Nevada Division of Environmental Protection, NPDES Municipal Stormwater Discharge Permit No. NVS000001.

Kennedy/Jenks Consultants, 2001. Technical Memorandum No. 3.0, Structural Controls for Stormwater Quality Enhancement. Prepared for the Truckee Meadows Interlocal Stormwater Committee.

Kennedy/Jenks Consultants, 2001. Southern Washoe County Groundwater Recharge Analysis. Prepared for the Regional Water Planning Commission.

Lamphere, B. and J. Gilliam. 2006. Stream Fish as Bioindicators of Water Quality: Assessing Threshold Responses to Urbanization and Correlations with Invertebrate Indices. Presented at 2005-2006 Water Resources Research Seminar Series, University of North Carolina, March 22, 2006.

Lawrence, S.J. and R.L. Seiler. 2002. Physical Data and Biological Data for Algae, Aquatic Invertebrates, and Fish from Selected Reaches on the Carson and Truckee Rivers, Nevada and California, 1993-97. U.S. Geological Survey. Open-File Report 02-012.

Minton, G.R., 2005. Stormwater Treatment, Biological, Chemical & Engineering Principles, Resource Planning Associates, Seattle, Washington.

Nevada Division of Environmental Protection, 2002. Nevada's 2002 303(d) Impaired Water List.

Sacramento Stormwater Management Program, 2000. Guidance Manual for On-Site Stormwater Quality Control Measures.

Schueler, T., 1987. Controlling Urban Runoff, A Practical Manual for Planning and Designing Urban BMPs, July 1987.

State of Nevada, 2002. Nevada County Population Estimates July 1, 1986 to July 1, 2002. The Nevada State Demographer's Office.

Stahre, P. and B. Urbonas, 1990. Stormwater Detention for Drainage, Water Quality and CSO Management. Prentice-Hall, Inc.

Terrene Institute, 1996. A Watershed Approach to Urban Runoff: Handbook for Decisionmakers.

The Cities of Reno, Sparks, Washoe County and the Nevada Department of Transportation, 1992. NPDES Permit NV0021768, Stormwater Discharge Permit, Twenty-Four Month Update Report, September 30, 1992.

Urban Drainage and Flood Control District, 1999. Drainage Criteria Manual (V.3). City and County of Denver, Colorado.

U.S. EPA, 2002. Stormwater Phase II Compliance Assistance Guide. United States Environmental Protection Agency, Office of Water. EPA 833-R-00-002.

U.S. Environmental Protection Agency, 2000. Stormwater Phase II Final Rule, Illicit Discharge Detection and Elimination Minimum Control Measure. USEPA Office of Water, EPA 833-F-00-007, January 2000, Fact Sheet 2.5.

U.S. Environmental Protection Agency, 1997. Guidance Manual for Implementing Municipal Stormwater Management Programs, Volume I, Planning and Administration.

U.S. Environmental Protection Agency, 1997. Terms of the Environment, http://www.epa.gov/OCEPAterms/

U.S. Environmental Protection Agency, 1995. Stormwater Discharges Addressed By Phase II of the National Pollutant Discharge Elimination System Storm Water Program: Report to Congress.

U.S. Environmental Protection Agency, 1994. TMDL Case Study: Truckee River, Nevada. Office of Water (4503F) Washington, DC 20460 EPA841-F-94-006, August 1994, Number 13.

U.S. Environmental Protection Agency, 1993. Guidance Specifying Management Measures for Sources of Nonpoint Pollution in Coastal Waters. EPA 840-B-92-002, January 1993.

U.S. Environmental Protection Agency, 1983. Results of the Nationwide Urban Runoff Program. Water Planning Division, NTIS number PB 84185552, Washington, D.C., December 1983.

U.S. Geological Survey (USGS). 2003. Ecological Indicators of Water Quality in the Spokane River, Idaho and Washington, 1998 and 1999. Publication FS-067-03, September, 2003.

VanderWilt, Margaret, Meredith, Andrew, and Stephen Menard. The Relationship Between Impervious Surface Coverage and Water Quality. In Proceedings of the 3rd Biennial Coastal GeoTools Conference, Charleston, SC., January 6-9, 2003.

Western Regional Climate Center, 2003. General Climate Summary for the Reno WSFO Airport, 1937 to 2003 http://www.wrcc.dri.edu/.

Websites

California Stormwater BMP Handbooks; www.cabmphandbooks.com

City of Boise Stormwater; http://www.cityofboise.org/public_works/services/water/storm_water/

City of Palo Alto Stormwater; http://www.city.palo-alto.ca.us/cleanbay/storm.html

City of Sparks Municipal Code; http://www.ci.sparks.nv.us/municode/

City of Reno Municipal Code:
http://livepublish.municode.com/LivePublish/newonlinecodes.asp?infobase=11467

Low Impact Development (LID) Center http://www.lowimpactdevelopment.org/

Sacramento Stormwater Management Program; http://www.sactostorm water.org

Stormwater Manager's Resource Center; http://www.storm watercenter.net

Stormwater, the Journal for Surface Water Quality Professionals,
http://www.forester.net/sw.html

Truckee Meadows Regional Stormwater Quality Management Program www.TMstorm water.com

Washoe County Development Code:
http://www.co.washoe.nv.us/comdev/comdevcode/comdevcode_index.htm

Section 3

The Truckee Meadows Structural Controls Program

Section 3: The Truckee Meadows Structural Controls Program

3.0 Legal Authority

In 2003, the Cities of Reno and Sparks and Washoe County adopted new municipal codes and ordinances that provide regulations and grant permitting and enforcement authority for storm water quality management. These codes and ordinances include requirements such as the use of storm water BMPs, the notification of spills and the use of good housekeeping practices at commercial and industrial sites. They prohibit pollutants from being discharged to the storm drain system, waste or other materials that might become a pollutant from being deposited onto streets, parking areas or any public or private land and provide surface cleaning regulations. They also require the maintenance of private storm water facilities and secure the right of entry onto private property for inspections by City and County staff. Enforcement procedures include termination of service and civil and criminal penalties. In addition, the Truckee Meadows Structural Controls Design Manual is adopted by reference. These codes and ordinances are contained in Chapter 12.16. Article IV of the City of Reno Municipal Code, Chapters 13.55 through 13.75 of the City of Sparks Municipal Code, and Ordinance No. 1223 of the Washoe County Code. Article 418 of the Washoe County Development Code also regulates development activity within and adjacent to perennial streams by establishing buffer zones.

The Cities and County also have existing ordinances and practices that require permits for construction activities and a regulatory process for reviewing and approving plans and permits and inspecting sites for compliance. The permits for construction activities include grading, site development, building, and encroachment permits. Plans requiring review include tentative, final, parcel and subdivision maps, site plans, drainage plans, and erosion and sediment control plans. The existing permitting and plan review process differs between the three jurisdictions and is based on different governmental structures, ordinances, policies and procedures.

Since the regulatory process for reviewing and approving plans and permits, inspecting sites and facilities and conducting maintenance activities varies between the three jurisdictions, similar policies and procedures will need to be developed that require the installation, operation and long-term maintenance of post-construction BMPs for specific categories of development. It is important to note that some sites will be able to effectively address storm water pollution control through the use of source controls alone and will not be required to implement structural treatment controls. Other sites may be able to utilize regional structural treatment controls. Developing policies and procedures that require the installation, operation and long-term maintenance of post-construction BMPs for specific development categories is a common method used by other communities to address the requirements of their NPDES municipal storm water permit.

3.1 Local Policies and Procedures

As noted in Section 2.1, the Cities of Reno and Sparks and Washoe County (the permittees) are required under federal and state regulations (U.S. EPA and NDEP) to reduce pollutant loadings in their municipal storm drain systems to the “maximum extent practicable” (MEP). They must develop policies and planning procedures that effectively implement and enforce the operation

and maintenance of source controls and structural treatment controls at areas of new development and significant redevelopment.

During the development of the Structural Controls Design Manual, the policies and procedures implemented and enforced by a number of other Phase I communities located in the southwest U.S. were reviewed and recommendations for the permittees were developed.

Recommendations included drafting new ordinances and developing the following program elements for the permittees Structural Controls Program:

- Plan Review
- Performance Standards
- Access and Maintenance
- Inspection and Enforcement
- Public Reporting

As part of the Structural Controls Program development, the permittees plan to form a Professional Advisory Group (PAG) composed of local professionals to assist with the development of policies and procedures that are fair and equitable to the development community, the owners of structural treatment controls, as well as reasonable for agency staff to administer. The PAG will provide recommendations for the permittees to consider that will be intended to meet the MEP standard required under the NPDES municipal storm water permit. Once developed and adopted by the permittees, local policies and procedures for the Truckee Meadows Structural Controls Program will be incorporated into this section of the manual.

The reader is encouraged to review Technical Memorandum SC 3.0 – Proposed Performance Standards and Water Quality Design Criteria and Technical Memorandum SC 4.0 – Developing Policies and Procedures. Copies of these documents can be viewed and downloaded at www.Tmstormwater.com. These technical memoranda contain recommendations that have been developed for the PAG to use as a starting point in the development of local policies and procedures. Although the performance standards recommended in Technical Memorandum SC 3.0 have not been adopted at this time, the water quality design criteria have been adopted and are defined in Section 3.2.

3.1.1 Public Reporting

Currently, the Cities Public Works and Environmental Control departments and the Counties Public Works and District Health departments receive and respond to complaints regarding illegal dumping and improper storage of chemicals and other materials. In the future, a centralized “Hotline” may be developed for public reporting of all water quality concerns and complaints. Currently, the illegal dumping of unknown substances and discharges of non-storm water substances to the storm drain system in the Truckee Meadows, other than those noted in Section 2.3, should immediately be reported to the Washoe County District Health Department, Environmental Health Services Division (775) 328-2436.

3.1.2 Public Resources

The Natural Resource Conservation Service (NRCS) is a division of the United States Department of Agriculture and its primary function in Nevada is to provide assistance to agricultural projects. However, the NRCS also provides local soil survey information to contractors and design engineers working on public and private construction projects.

Natural Resource Conservation Service
5301 Longley Lane
Reno, NV 89502
Phone: (775) 784-5317 Fax: (775) 784-5939
Current Contact: Mr. Charles Houston, State Conservation Engineer
Website: http://www.nrcs.usda.gov/

The Nevada Division of Environmental Protection (NDEP), Bureau of Water Pollution Control is the state agency responsible for issuing the Municipal Stormwater Permit (NVS000001) to the Cities and the County as well as the General Permits for Stormwater Associated with Construction Activity and Industrial Activity (NVR100000 and NVR050000, respectively). As such, NDEP can provide guidance to contractors and design engineers with permit requirements, preparing SWPPPs and appropriate BMP selection. The NDEP website also provides a significant amount of information about the state and EPA storm water programs.

Nevada Division of Environmental Protection
Bureau of Water Pollution Control
901 S. Stewart Street, Suite 4001
Carson City, NV 89701
Phone: (775) 687-9429 Fax: (775) 687-4684
Current Contact: Mr. Steve McGoff, P.E.
Email: smcgoff@ndep.nv.gov
Website: http://ndep.nv.gov/bwpc/storm03.htm

The Nevada Division of Forestry (NDF) is a state agency and its primary function is to protect, manage and rehabilitate the states forests. BMP guidance is also provided under NRS 528 for construction sites proposing to convert forestlands to non-forest uses. NDF manages the Urban Forestry Program and provides guidance on protecting trees. The agency also manages the Nevada Tree Bank and the Nevada Tree Nursery. NDF has also worked on revegetation projects on the Truckee River with the Nature Conservancy. NDF is familiar, and can provide assistance with local soils, native vegetation, and effective methods of controlling erosion and sediment transport at construction sites in the Truckee Meadows.

Nevada Division of Forestry
2525 So. Carson St.
Carson City, NV 89701
Phone: (775) 684-2507 Fax: (775) 687-4244
Current Contact: Rich Harvey
Website: http://www.forestry.nv.gov/

The Truckee Meadows Water Authority (TMWA) provides local landscape information that can be used to guide contractors, landscape architects and landowners with revegetation and final site stabilization efforts. TMWA's Landscape Information Package includes an "Irrigation and Design Guide", a "Plant Guide" and a "Maintenance and Planting Guide" with recommended

hardy water-efficient plants and tips to design and maintain a robust landscape in the arid climate of the Truckee Meadows.

Truckee Meadows Water Authority
1155 Corporate Blvd.
Reno, NV 89502
Phone: (775) 834-8000 Fax: (775) 834-8003
Website: http://www.tmh2o.com

The University of Nevada Cooperative Extension provides community education and outreach in horticulture, natural resources, and other areas. UNCE coordinates the Master Gardener program and provides assistance to the public in identifying plants, diagnosing plant problems, and selecting appropriate plant materials. The Cliff Fouts demonstration garden incorporates a variety of landscape plants suitable for the area. UNCE also sponsors a gardening series for the public, Gardening in Nevada, from February to April each year, and conducts an annual nursery worker training. Training is also provided on invasive weed identification and management.

University of Nevada Cooperative Extension, Washoe County office
5305 Mill St.
Reno, NV 89502
Phone: (775) 784-4848 Fax: (775) 784-4881
Current Contact: Frank Flavin, Area Director
Website: http://www.unce.unr.edu

The Washoe-Storey Conservation District (WSCD) has been providing plan review assistance for storm water quality to the Cities and County for more than 25 years. WSCD has considerable expertise in local soils, native vegetation, and effective methods of controlling erosion and sediment transport at construction sites. WSCD can provide guidance to contractors and design engineers for preparing Erosion and Sediment Control Plans, SWPPPs, and selecting, installing and implementing appropriate BMPs.

Washoe-Storey Conservation District
1201 Terminal Way, #222
Reno, NV 89502
Phone: (775) 322-9934 Fax: (775) 784-5512
Website: http://www.wscd.org/

Wilbur D. May Arboretum and Botanical Gardens/Washoe Regional Parks and Open Space, conducts educational classes on erosion and sediment control, landscaping techniques, home irrigation design, turf alternatives and xeriscape gardening. The Botanic and Demonstration Gardens at the May Arboretum also provide numerous examples of local plants and other species that grow successfully in the Truckee Meadows.

Wilbur D. May Arboretum
Located at Rancho San Rafael Park
1595 N. Sierra Street
Reno, NV 89503
Phone: (775) 785-4153 Fax: (775) 785-4707
Current Contact: Bill Carlos, Horticulturist
Email: Bcarlos@washoecounty.us

3.2 Water Quality Design Criteria

Many NPDES municipal storm water permits throughout the country require new development and redevelopment projects to capture and then infiltrate or treat storm water runoff prior to discharging to the storm drain system. To treat runoff and enhance water quality, design criteria are required for both flow and volume-based structural treatment controls. A set of general design criteria that should be consulted when sizing all structural treatment controls in the Truckee Meadows are provided in the following sections. These design criteria apply to water quality flow or volume sizing criteria that is based on the analysis of the local precipitation data presented in Section 2.4. Flows in excess of the water quality flow or volume must be diverted around or through structural treatment controls in a manner that does not allow the scour or re-suspension of collected sediments or increase the discharge of pollutants into the storm drain system. Therefore, general design criteria for diversion structures are also provided. Design criteria that are specific to individual structural treatment controls (e.g. perforation diameter sizing for the principal outlet structure of an extended detention basin) are provided on the BMP fact sheets in Section 6.0.

The water quality design criteria developed and implemented by the following communities were reviewed and used as a models during the development of regional sizing criteria for flow and volume-based treatment controls and diversion structures in the Truckee Meadows:

- The City and County of Sacramento, California
- The City of Livermore, California
- The City of Boise, Idaho
- The City of Denver, Colorado
- The City of Austin, Texas

In addition, the new California Stormwater Best Management Practices Handbook for New Development and Redevelopment developed in 2003 by the California Stormwater Quality Association was reviewed and referenced.

3.2.1 Sizing Criteria for Flow-Based Storm Water Treatment Controls

Flow-based design standards apply to those structural treatment controls whose primary method of pollutant removal is based on the flow and filtration of runoff through the BMP. A specified water quality flow rate (WQ_F) is conveyed through the BMP and pollutants are removed by filtration through vegetation, sand filters and other types of media capable of trapping sediments and associated pollutants typically transported in urban runoff. The water quality flow rate represents the flow rate produced by the most frequently occurring rainfall/runoff events. Infiltration into underlying soils typically enhances the performance of flow-based BMPs. The general categories of flow-based storm water treatment controls include vegetated treatment systems, some media filtration systems and many manufactured (proprietary) treatment controls.

The WQ_F for flow-based storm water treatment controls installed in the Truckee Meadows should be determined by using the Rational Method to estimate the peak discharge produced by

the 2-year storm event for the drainage area of the BMP. The Rational Method is based on the formula:

$$Q = CIA \qquad \text{equation 3-1}$$

Where: Q = peak flow rate (cfs)

C = the runoff coefficient of the contributing drainage area

I = rainfall intensity (in/hr) for a duration equal to the time of concentration

A = the contributing drainage area (acres)

The Rational Method should be used to determine peak flow rates for drainage areas of 100 acres or less, and 25 acres or less where the composite runoff coefficient is 0.50 or less. It should be used with caution when estimating peak flows for relatively large undeveloped areas (25 acres or more), particularly where runoff coefficients are highly variable with storm intensity and antecedent soil moisture conditions. Where these conditions exist, the Rational Method will likely overestimate peak flow rates.

When I equals the rainfall intensity for the 2-year storm event, $Q = WQ_F$. The Drainage Design Manuals for the Cities of Reno and Sparks and Washoe County provide detailed explanations and examples of the Rational Formula. Rainfall intensities and runoff coefficients "C" values should be obtained from the current drainage design manual of the agency that has jurisdiction over the project. An example of the "C" values provided in the City of Sparks and Washoe County Drainage Design Manuals (1996 and 1998, respectively) is provided on Table 3-1. Rainfall intensities should be determined using the intensity-depth-duration curves provided in the City and County Drainage Design Manuals. An example of the intensity-depth-duration curve developed for Region 1 as presented in the City of Sparks Drainage Design Manual (1998) is provided on Figure 3-1. Although "C" values are relatively the same in the drainage design manuals of the three jurisdictions, the intensity-depth-duration curves vary depending on location in the Truckee Meadows. Therefore it is imperative to use the drainage design manual for the jurisdiction where the project is located.

For drainage areas greater than 100 acres, peak flow rates should be estimated using the NRCS TR-55 Method or HEC-1. Design of flow-based storm water treatment controls and use of the Rational Method, NRCS TR-55 Method and HEC-1 for determining flow rates should be consistent with the policies and procedures of the local jurisdictions' current drainage design manuals.

To ensure that flooding of critical areas and structures will not occur during larger storm events, upstream diversion structures that limit flows through flow-based BMPs to the 2-year peak flow rate may be required. If upstream diversion structures are required because a flow-based storm water treatment control only has the capacity to convey the peak discharge produced by the 2-year storm event, all excess flows must be diverted.

3.2.2 Sizing Criteria for Volume-Based Storm Water Treatment Controls

Volume-based BMP design standards apply to those storm water treatment controls whose primary method of pollutant removal is based on the facilities ability to capture and detain, retain and/or infiltrate a specific water quality volume. The water quality volume represents the runoff

Table 3-1. Runoff coefficients for the Rational Method from the City of Sparks and Washoe County Hydrologic Criteria and Drainage Design Manuals (1996 and 1998, respectively).

Land Use or Surface Characteristics	Aver. % Impervious Area	Runoff Coefficients 5-Year (C_5)	Runoff Coefficients 100-Year (C_{100})
Business/Commercial:			
Downtown Areas	85	.82	.85
Neighborhood Areas	70	.65	.80
Residential:			
(Average Lot Size)			
⅛ Acre or Less (Multi-Unit)	65	.60	.78
¼ Acre	38	.50	.65
⅓ Acre	30	.45	.60
½ Acre	25	.40	.55
1 Acre	20	.35	.50
Industrial:	72	.68	.82
Open Space:			
(Lawns, Parks, Golf Courses)	5	.05	.30
Undeveloped Areas:			
Range	0	.20	.50
Forest	0	.05	.30
Streets/Roads:			
Paved	100	.88	.93
Gravel	20	.25	.50
Drives/Walks:	95	.87	.90
Roofs:	90	.85	.87

Notes:

1. Composite runoff coefficients shown for Residential, Industrial, and Business/Commercial Areas assume irrigated grass landscaping for all previous areas. For development with landscaping other than irrigated grass, the designer must develop project specific composite runoff coefficients from the surface characteristics presented in this table.

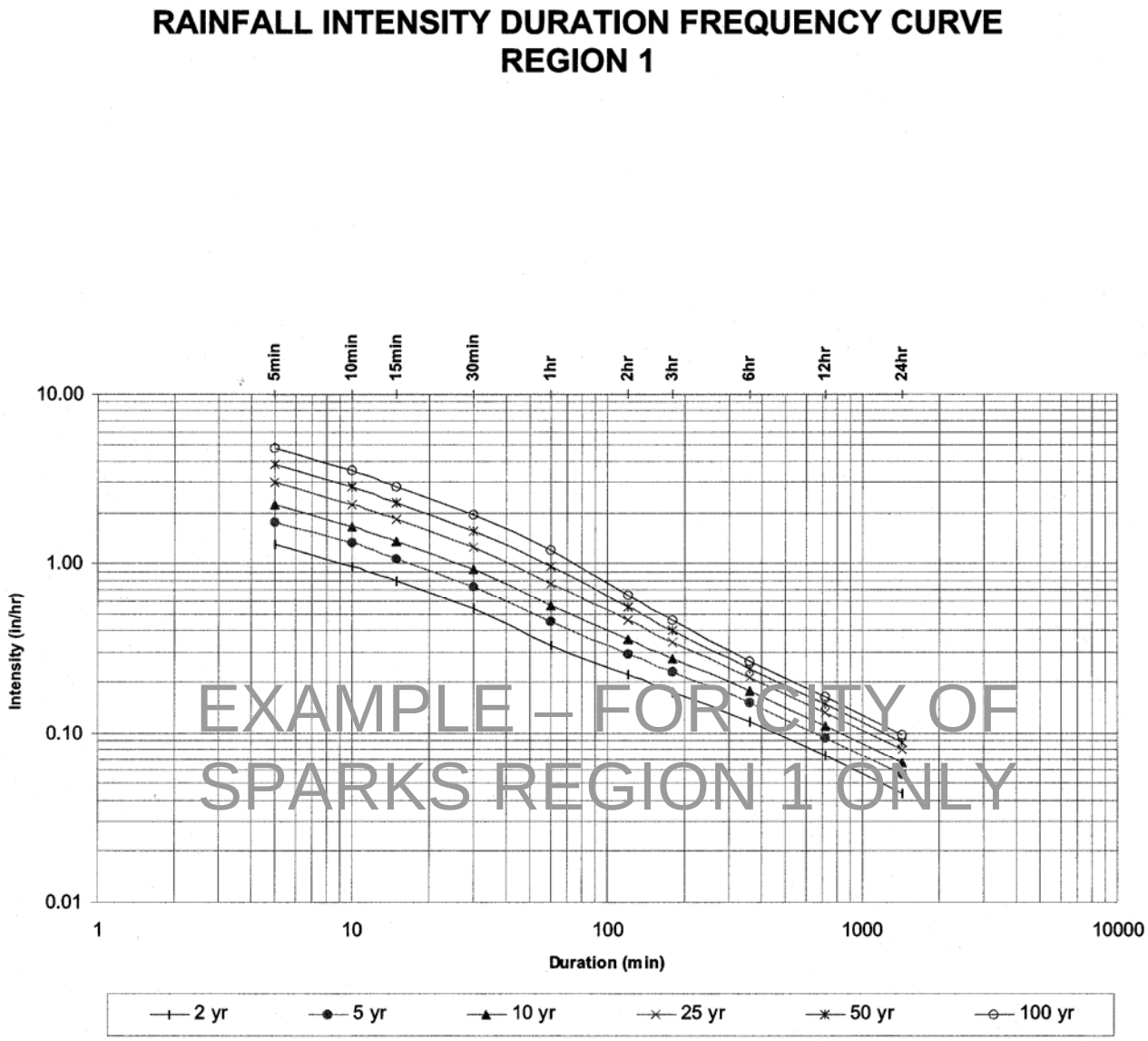

Figure 3-1. Intensity-depth-duration curve for Region 1 of Sparks from the City of Sparks Hydrologic Criteria and Drainage Design Manual,1998.

volume produced by the most frequently occurring rainfall/runoff events. The primary pollutant removal mechanism is the extended detention of the water quality volume so that suspended sediments and associated pollutants are allowed sufficient time to settle and collect in the basin or in the voids of permeable materials in the BMP. As with flow-based treatment controls, infiltration into underlying soils typically enhances the performance of volume-based BMPs. The general categories of volume-based storm water treatment controls include infiltration systems, bioretention systems, extended detention basins, and ponds and constructed wetlands.

Volume-based storm water treatment controls in the Truckee Meadows should be designed to capture and detain volume determined with the Water Quality (WQ_V) method. The WQ_V method is based on the following formulas:

$$WQ_V = [(P)(R_V)(A)]/12 \qquad \text{equation 3-2}$$

$$R_V = 0.05 + 0.009I \qquad \text{equation 3-3}$$

Where: WQ_V = water quality volume (ft^3)

P = the 90th percentile precipitation depth (0.60 inches)

R_V = watershed runoff coefficient

I = percent of watershed impervious area

A = drainage area (ft^2)

12 = units conversion constant

The watershed runoff coefficient (R_V) in the WQ_V method is based on a regression equation developed from precipitation data for a number of relatively small urban drainages distributed throughout the U.S. The 90th percentile precipitation depth (P) is based on an analysis of local long-term hourly precipitation data for the Reno Tahoe International Airport and has been determined to be 0.60 inches (refer to Section 2.5 for additional discussion of the storm water hydrology of the Truckee Meadows).

3.2.3 Diversion Structures

Implementing one or both of the following techniques typically accomplishes capture or isolation of the water quality flow (WQ_F) or water quality volume (WQ_V):

- Use of diversion structures, such as weirs, orifices or pipes, to divert the WQ_F or WQ_V into an off-line structural treatment control. The diversion structure is typically located at or upstream of the inlet to the BMP (Figures 3-2 and 3-3).

- Bypassing flows in excess of the WQ_F or WQ_V using weirs, orifices or pipes within in-line structural treatment controls and routing these flows to the conventional storm drain system or another treatment control BMP (Figures 3-4 and 3-5).

Since conventional storm drainage systems are typically constructed to convey flows from the larger storm events (the 5-year up to the 100-year peak flow) without regard for treatment, the design engineer must ensure there is sufficient capacity in the diversion structure to accommodate overflows. Therefore, the engineer must establish the design capacity of the

storm drain system when designing diversion structures and structural treatment controls for storm water quality enhancement. The following figures provide examples of diversion structures and the following discussion provides the recommended procedures for sizing various diversion structures for flow and volume-based treatment controls BMPs.

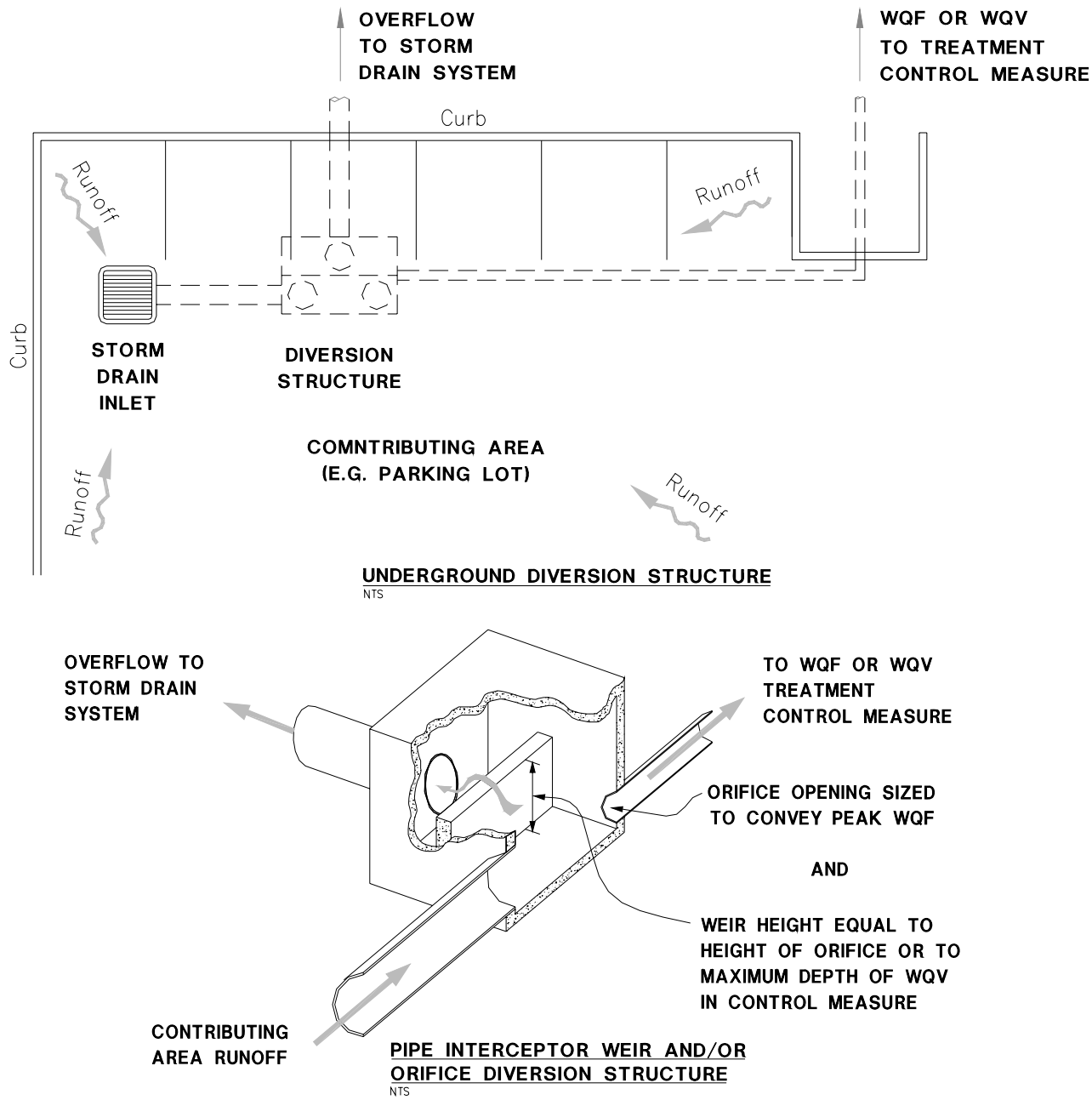

Figure 3-2. Example of an underground pipe interceptor weir and/or orifice diversion structure for WQ_F or WQ_V treatment control measures.

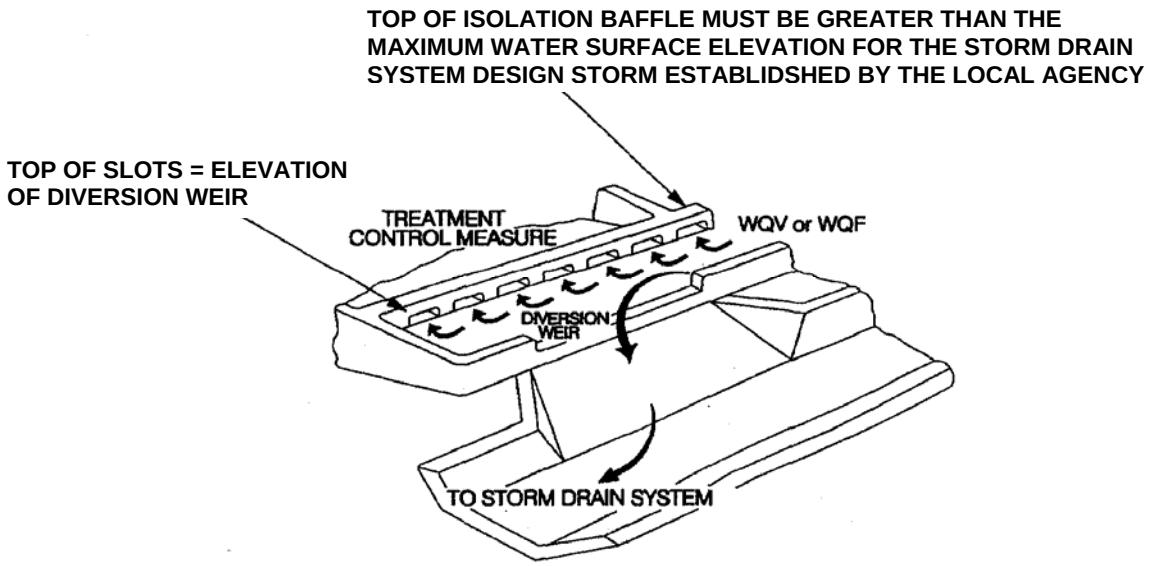

Figure 3-3. Example of a surface channel diversion structure for flow or volume based treatment controls (modified from City of Austin, 2003).

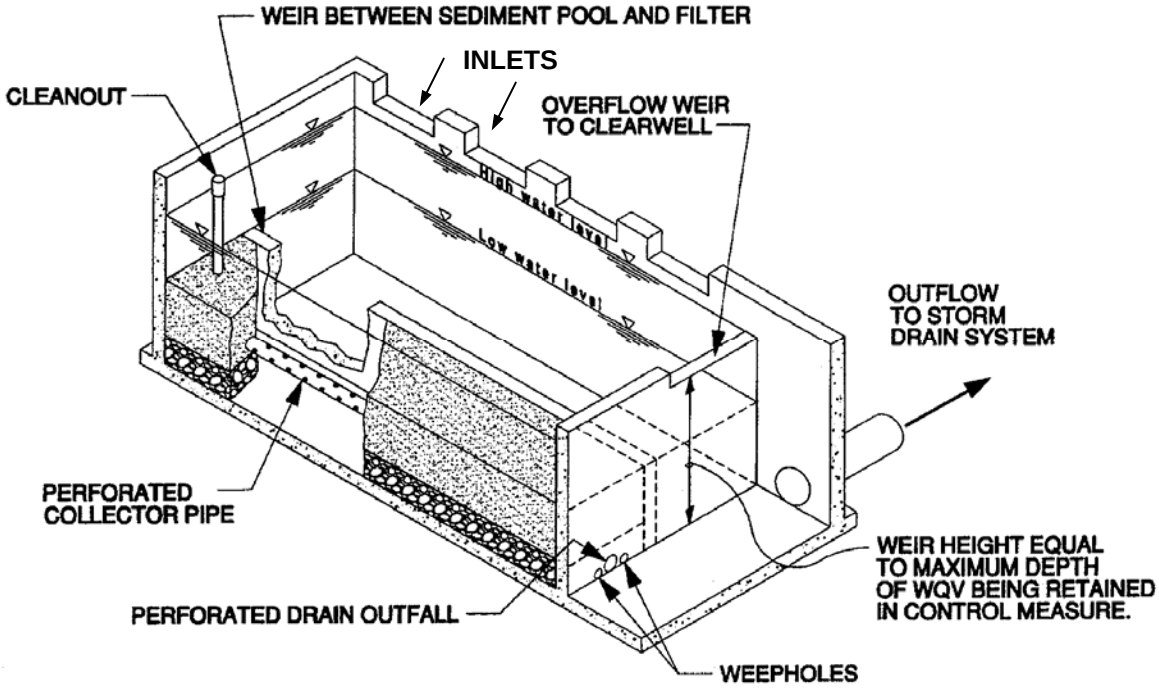

Figure 3-4. Example of an in-line underground sand filter with an overflow weir (City of Sacramento, 2000).

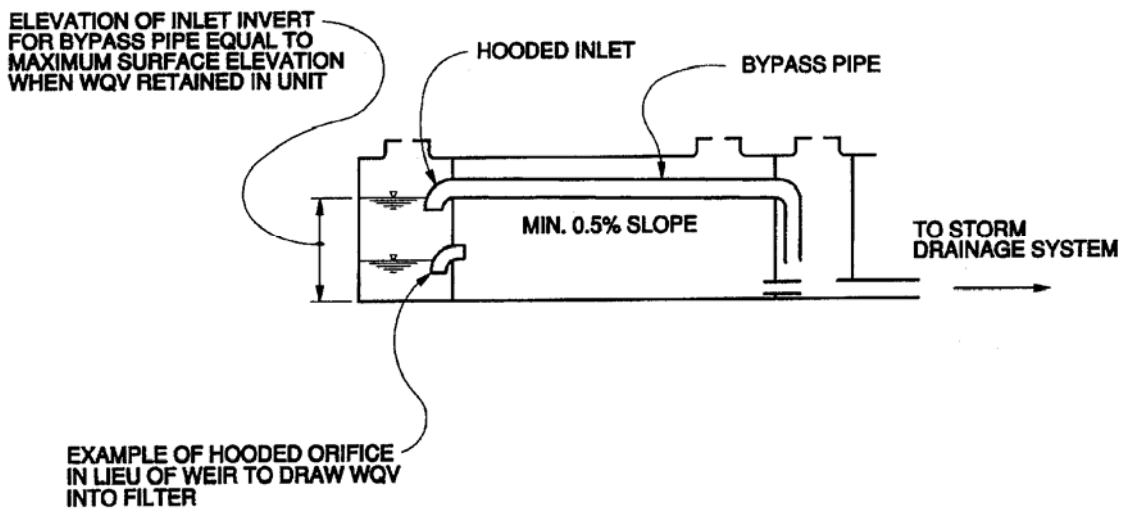

Figure 3-5. Example of an in-line treatment control measure with a bypass pipe (City of Sacramento, 2000).

Designing Weirs for Flow-Based Treatment Controls

1) Establish the design capacity of the storm drain system at the point of diversion.

2) Determine the WQ_F for the proposed structural treatment control using equation 3-1.

3) Determine the depth of flow in the storm drain system at the WQ_F using the Manning's equation.

$$WQ_F = (1.49/n)AR^{2/3}S^{1/2} \qquad \text{equation 3-4}$$

Where: WQ_F = water quality peak flow rate (cfs)

1.49 = conversion factor for English units

n = Manning roughness coefficient (dimensionless)

A = cross sectional area of the storm drain pipe or channel (ft^2)

R = hydraulic radius of the storm drain pipe or channel (ft)

S = slope of the pipe or channel (ft/ft)

Nomographs or computer programs can also be used to determine the depth of flow.

4) Set the weir height (H) at the flow depth determined in step 3.

5) Use the equation for a rectangular broad-crested weir to determine weir length (L).

$$Q_{SD} = CLh^{1.5} \qquad \text{equation 3-5}$$

Where: Q_{SD} = the peak flow rate for the storm drain system (cfs)

C = the weir coefficient

L = the effective horizontal length of the weir (ft)

h = the depth of flow above the crest of the weir (ft)

6) Ensure sufficient head is available in the design of the weir structure to accommodate overflow from the larger storm events.

The weir or discharge coefficient "C" for a broad-crested weir accounts for factors such as the flow approach velocity. It has been determined experimentally to range between 2.67 and 3.05. A value of C = 3.0 is typically used for the design for the design of detention overflow structures, spillways and diversion structures (Stahre and Urbonas, 1990). Table 3-2 provides a list of Manning roughness coefficients (n) for various channel-lining materials as provided in the City of Sparks and Washoe County Drainage Design Manuals (1996 and 1998, respectively).

Designing Weirs for Volume-Based Treatment Controls

1) Establish the design capacity of the storm drain system at the point of diversion.

2) Determine the WQ_V for the proposed structural treatment control using equations 3-2 and 3-3.

3) Using the design and construction criteria provided in the BMP fact sheets, determine the water level height in the treatment control measure when the entire WQ_V is retained within the structure.

4) Set the weir height (H) at the water level height determined in step 3.

5) Use equation 3-5 to determine weir length (L).

6) Design weir with low-flow capabilities so that no ponding occurs behind the weir.

Ensure sufficient head is available in the design of the weir structure to accommodate overflow from the larger storm events.

Designing Orifices for Volume-Based Treatment Controls

1) Establish the design capacity of the storm drain system at the point of diversion.

2) Determine the WQ_V for the proposed structural treatment control using equations 3-2 and 3-3.

3) Using the design and construction criteria provided in the BMP fact sheets, determine the water level height in the treatment control measure when the entire WQ_V is retained within the structure.

4) Set the invert elevation of the orifice at the water level height determined in step 3.

5) Establish the size of the orifice opening using the following equation:

$$Q_{SD} = C_d A(2gh_d)^{1/2} \qquad \text{equation 3-6}$$

Where: Q_{SD} = capacity of the storm drain system from step 1 (cfs)

C_d = orifice coefficient = 0.65 (dimensionless)

A = orifice area (ft^2)

g = acceleration of gravity (32.2 ft/sec^2)

h_d = height of water above mid-point of orifice (ft)

6) Ensure sufficient head is available in the treatment control BMP to accommodate flows from larger storm events through the orifice.

In addition to providing a bypass for the amount of water that exceeds the WQ_V, orifices can be used within volume based treatment controls in place of weirs or pipes to prevent floatables from entering the conventional storm drain system.

Designing Bypass Pipes for Volume-Based Treatment Controls

1) Repeat steps 1 through 3 under Designing Orifice Diversions for Volume-Based Treatment Controls.

2) Size the bypass pipe to the design capacity of the storm drain system (Q_{SD}). Assuming the bypass pipe flows full at Q_{SD}, use the following version of the Manning's equation:

$$D = \left(\frac{2.159 Q_{SD} n}{S^{1/2}} \right)^{3/8} \qquad \text{equation 3-7}$$

Where: D = diameter of the bypass pipe (ft)

Q_{SD} = capacity of the storm drain system (cfs)

n = Manning's roughness coefficient (dimensionless)

S = slope of the pipe or channel (ft/ft)

Ensure sufficient head is available in the treatment control BMP to accommodate flows from larger storm events through the bypass pipe.

Table 3-2. Manning's Roughness Coefficients for Open Channels (Chow, V.T., Open Channel Hydraulics, 1959)

TYPICAL ROUGHNESS COEFFICIENTS FOR OPEN CHANNELS

	TYPE OF CHANNEL AND DESCRIPTION	MINIMUM	NORMAL	MAXIMUM
EXCAVATED OR DREDGED				
a.	Earth, straight and uniform			
1.	Clean, recently completed	0.016	0.018	0.020
2.	Clean, after weathering	0.018	0.022	0.025
3.	Gravel, uniform section, clean	0.022	0.025	0.030
4.	With short grass, few weeds	0.022	0.027	0.033
b.	Earth, winding and sluggish			
1.	No vegetation	0.023	0.025	0.030
2.	Grass, some weeds	0.025	0.030	0.033
3.	Dense weeds or aquatic plans in deep channels	0.030	0.035	0.040
4.	Earth bottom and rubble sides	0.028	0.030	0.035
5.	Stony bottom and weedy banks	0.025	0.035	0.040
6.	Cobble bottom and clean sides	0.030	0.040	0.050
c.	Dragline-excavated or dredged			
1.	No vegetation	0.025	0.028	0.033
2.	Light brush on banks	0.035	0.050	0.060
d.	Rock cuts			
1.	Smooth and uniform	0.025	0.035	0.040
2.	Jagged and irregular	0.035	0.040	0.050
e.	Channels not maintained, weeds and brush			
1.	Dense weeds, high as flow depth	0.050	0.080	0.120
2.	Clean bottom, brush on sides	0.040	0.050	0.080
3.	Same as above, but highest state of flow	0.045	0.070	0.110
4.	Dense brush, high state	0.080	0.100	0.140
NATURAL STREAMS				
Minor Streams (top width at flood stage <100 ft)				
a.	Streams on plain			
1.	Clean, straight, full stage, no rifts or deep pools	0.025	0.030	0.033
2.	Same as above, but more stones and weeds			
3.	Clean, winding, some pools and shoals	0.030	0.035	0.040
4.	Same as above, but some weeds and stones	0.033	0.040	0.045
5.	Same as above, but lower stages, and more	0.035	0.045	0.050
	ineffective slopes and sections	0.040	0.048	0.055

TYPICAL ROUGHNESS COEFFICIENTS FOR OPEN CHANNELS

TYPE OF CHANNEL AND DESCRIPTION	MINIMUM	NORMAL	MAXIMUM
6. Same as 4, but more stones	0.045	0.050	0.060
7. Sluggish reaches, weedy, deep pools	0.050	0.070	0.080
8. Very weedy reaches, deep pools, or floodways with heavy stand of timber and underbrush	0.075	0.100	0.150
b. Mountain streams, no vegetation in channel, banks usually steep, trees and brush along banks submerged at high stages			
1. Bottom: gravel, cobbles, and few boulders	0.030	0.040	0.050
2. Bottom: cobbles with large boulders	0.040	0.050	0.070
Floodplains			
a. Pasture, no brush			
1. Short grass	0.025	0.030	0.035
2. High grass	0.030	0.035	0.050
b. Cultivated areas			
1. No crop	0.020	0.030	0.040
2. Mature row crops	0.025	0.035	0.045
3. Mature field crops	0.030	0.040	0.050
c. Brush			
1. Scattered brush, heavy weeds	0.035	0.050	0.070
2. Light brush and trees, in winter	0.035	0.050	0.060
3. Light brush and trees, in summer	0.040	0.060	0.080
4. Medium to dense brush, in winter	0.045	0.070	0.110
5. Medium to dense brush, in summer	0.070	0.100	0.160
d. Trees			
1. Dense willows, summer, straight	0.110	0.105	0.200
2. Cleared land with tree stumps, no sprouts	0.030	0.040	0.050
3. Same as above, but with heavy growth of sprouts	0.050	0.060	0.080
4. Heavy stand of timber, a few down trees, little undergrowth, flood stage below branches	0.080	0.100	0.120
5. Same as above, but with flood stage reaching branches	0.100	0.120	0.160
Major streams (top width at flood state 100 ft). The n value is less than that for minor streams of similar description, because banks offer less effective resistance.			
a. Regular section with no boulders or brush	0.025	--	0.060
b. Irregular and rough section	0.0.5	--	0.100

TYPICAL ROUGHNESS COEFFICIENTS FOR OPEN CHANNELS

	TYPE OF CHANNEL AND DESCRIPTION	MINIMUM	NORMAL	MAXIMUM
LINED OR BUILT-UP CHANNELS				
a.	Concrete			
	1. Trowel finish	0.011	0.013	0.015
	2. Float finish	0.013	0.015	0.016
	3. Gunite, good section	0.016	0.019	0.023
	4. Gunite, wavy section	0.018	0.022	0.023
b.	Concrete bottom float finished with side of			
	1. Dressed stone in mortar	0.015	0.017	0.020
	2. Random stone in mortar	0.017	0.020	0.024
	3. Dry rubble or riprap	0.020	0.030	0.035
c.	Gravel bottom with sides of			
	1. Formed concrete	0.017	0.020	0.025
	2. Random stone in mortar	0.020	0.023	0.026
	3. Dry rubble or riprap	0.023	0.033	0.036
d.	Asphalt			
	1. Smooth	0.013	0.013	--
	2. Rough	0.016	0.016	--
e.	**Mixed Vegetation**	0.030	0.040	0.050

3.2.4 Groundwater Recharge Considerations

Passive groundwater recharge technologies are an effective means of reducing storm water volume runoff and supporting local groundwater resources. Onsite detention and infiltration, through the use of structural treatment controls can efficiently and cost effectively offset the loss of groundwater recharge resulting from the increase in impervious areas associated with development and redevelopment. In addition to providing storm water treatment and aquifer recharge benefits, onsite or localized recharge facilities and BMPs play an important role in the reduction of storm water conveyance infrastructure, decrease in the peak flow runoff, and provide storm water attenuation so that treatment processes can occur.

In Washoe County, the Regional Water Planning Commission (RWPC) has recognized the need for groundwater recharge for the continued protection of the area's groundwater resources. In 1999, the RWPC commissioned a study to delineate areas that have suitable conditions for natural or passive recharge to occur. These groundwater recharge protection areas are characterized by suitable soils and underlying lithography, land use and zoning that is supportive of recharge water quality and infrastructure, adequate depth to groundwater, slope, vegetation, proximity to other water resource facilities and numerous other recharge considerations. The final product was the *Southern Washoe County Groundwater Recharge Analysis* (Kennedy/Jenks 2001) including a GIS coverage to be incorporated in the Counties natural resource database that demarked areas that have suitable recharge conditions. These areas warrant greater investigation when development occurs. The areas in the Truckee

Meadows that are conducive to groundwater recharge should be developed using recharge-promoting BMPs such as porous pavements that limit impervious areas and infiltration systems that enhance recharge rates. The use of structural treatment controls that apply infiltration as a storm water treatment measure will support a broad based aquifer recharge program.

3.2.5 Combining Volume and Flow-Based BMPs

Flow and volume-based BMPs do not necessarily treat the same type of storm water runoff produced by different types of storm events. For example, a flow-based BMP might be overwhelmed by a short but intense storm event if the storm intensity results in runoff rates that exceed the flow-based BMP design flow rate (WQ_F). However, an in-line volume-based BMP such as an extended detention basin may be able to treat the design runoff volume (WQ_V) from the same storm event and is essentially unaffected by runoff entering the basin at a high rate but for a short duration. By contrast, a flow-based BMP such as a swale can treat the design flow rate of runoff and is essentially unaffected by the duration of a storm event such as a long, low intensity storm. However, a volume-based detention basin subjected to the same type of storm event may fill over time and overflow or go into a diversion structure, providing less treatment than the flow-based BMP.

Therefore, there may be some situations where a designer might need to consider using both flow and volume-based BMPs at a site. An example of where both types of design criteria might apply is an off-line detention basin. For an off-line detention basin, the capacity of the diversion structure could be designed to comply with the flow-based BMP design criteria while the detention basin itself could be designed to comply with the volume-based criteria. When both volume-based and flow based criteria apply, the designer should determine which of the criteria apply to each element of the BMP system, and then size the elements accordingly.

3.2.6 Additional Storm Water Treatment Measures

Under certain conditions, additional treatment measures can be implemented to structural treatment controls, storm drain systems and flood control structures to enhance water quality. Chemicals (such as Alum) can sometimes be added to enhance coagulation, flocculation and sedimentation. However, the additional use of chemicals must be applied with caution, as they may become an additional source of storm water pollution. Mechanical pumps, coalescing filters and floating curtain devices can also increase treatment and performance in some BMPs. In areas with particularly poor storm water quality, pump systems can be added to convey the “first flush” water quality volume to the sanitary sewer system. The use of additional treatment measures must be approved by the local regulatory agency and/or NDEP.

3.2.7 Vector Controls

Since many storm water quality improvement design features and facilities tend to detain or retain storm water and incorporate vegetation, they have the potential to create vector-breeding habitat. The production of mosquitoes and other vectors is a nuisance and public health threat. Mosquitoes can breed in standing water almost immediately and may persist at unnaturally high levels and for longer seasonal periods in man made habitats. Therefore, the siting, design, construction, and maintenance of storm water treatment controls must be considered in order to select a BMP that minimizes habitat for vectors. Appendix C provides a copy of the recently adopted District Board of Health Regulations Governing the Prevention of Vector Borne

Diseases. Design engineers should review these regulations when designing structural treatment controls that have the potential for breeding vectors, particularly BMPs with permanent water sumps such as ponds, wetlands, and vaults (including below-ground installations). The mosquito/midge breeding season in northern Nevada runs from May to October. During this period, water must not be allowed to temporarily pond in structural treatment controls for longer than 7 days.

The following checklist provides the District Health Department's design and maintenance considerations for minimizing vector breeding problems:

- Incorporate low flow "V" channels and minimum 3H:1V side slopes in detention basins, ponds and wetlands.
- Use top feeding minnows, mosquito fish (*Gambusia affinis*) and other fish to reduce or eliminate mosquito larvae.
- Use aeration to improve stagnant ponds.
- Prevent excess nutrients and pollutants from entering ponds.
- Do not spray chemicals or apply fertilizer near, uphill, or upwind of ponds.
- Prevent livestock from entering ponds and degrading the banks of ponds.
- Prevent ruts when mowing.
- Keep grass clippings out of ponds.
- Avoid shallow ponds and basins without fish or aeration.
- Employ chemical controls by a certified pesticide applicator only as a last resort.

Although many species of bats can consume large quantities of mosquitoes, they can also potentially transmit rabies. Since NAC 441.A prohibits the harborage of animals that can transmit rabies, the use of bat houses near ponds and wetlands is not allowed by the District Health Department. Additional design and maintenance considerations are presented in the BMP fact sheets presented in Section 6.

Section 4

Planning Principles and Site Design

Section 4: Planning Principles and Site Design

4.0 Planning Principles

Since conventional development methods have been shown to increase runoff, contribute pollutant loads to receiving waters and reduce groundwater recharge, planning principles for storm water quality enhancement require different site and facility design considerations. Planning principles for storm water quality enhancement and protection of local water resources should consist of the following strategy:

1. Reducing or maintaining post-project runoff to pre-development conditions;
2. Controlling sources of pollutants; and
3. Treating polluted storm water runoff before discharging it to the storm drain system or to receiving waters (if still needed after implementing 1 and 2).

Planning elements 1 and 2 are considered “source controls” because they emphasize reducing or eliminating pollutants in storm water runoff at their source by reducing runoff and potential pollutant exposure to rainfall and runoff. Planning element 3 considers the implementation of “treatment controls” that physically or biologically remove pollutants that have already impacted storm water runoff. Some land uses, such as residential developments, can effectively reduce runoff and control sources of pollutants through the implementation of source controls alone. Whereas industrial and commercial land uses may require a combination of source and treatment controls.

Source controls act to prevent storm water pollution by ensuring that potential pollutant sources are maintained in a manner that reduces exposure. Storm water pollution prevention is less expensive than treatment control and thus should be applied whenever possible. Source controls should be applied in storage areas, fueling areas, maintenance and work areas, wash areas, waste handling areas, and should also include the labeling of storm drains. To reduce the volume of storm water run-on to these areas, berming, grading, and roofing techniques can be applied.

Structural treatment controls are engineered facilities designed for the treatment of storm water runoff. They use infiltration, retention/detention and biofiltering techniques to remove pollutants. Vegetated swales and buffer strips, infiltration systems, bioretention systems, extended detention basins, ponds and constructed wetlands, media filtration systems, and oil/water separators are examples of structural treatment controls for storm water quality. They reduce the concentration of suspended solids, particulates, nutrients, metals, organics, and/or bacteria through filtration, absorption, and microbial decomposition of pollutants. Structural treatment controls can be considered public domain treatment controls or manufactured (proprietary) treatment controls. Public domain treatment controls are those that can be designed by an engineer and have been implemented and tested by numerous communities throughout the nation. Manufactured (proprietary) treatment controls are patented devices that have been engineered and constructed by private companies.

4.1 Site Design

Since every potential development site possesses unique topographic, hydrologic, and vegetative features, some are more suitable than others for certain types of BMPs. However the integration and incorporation of appropriate landscape planning methodologies can be widely applied. Landscaping strategies that drain and filter storm water are the one of the most effective methods of minimizing surface and groundwater impacts from storm water runoff. Routing roof runoff through landscaped and treatment controls provides additional storm water quality benefits. Reducing the amount of dry-weather flows through the use of efficient irrigation systems also helps to reduce the transport of pollutants to receiving waters. Landscape planning, roof runoff controls and efficient irrigation techniques have the additional benefit of assisting with water conservation efforts while minimizing public health vector nuisances. Finally, the labeling of storm drain inlets with "No Dumping – Flows to Creek" messages provides a highly visible public education message. It helps to educate the general public that the storm water runoff from streets and parking lots is conveyed through the storm drain system and does not receive treatment prior to discharge to local streams, rivers and lakes.

Additional information about planning principles and site design techniques that replicate pre-existing hydrologic site conditions can be obtained at the Low Impact Development (LID) Center http://www.lowimpactdevelopment.org/ In addition, in 2004 the Regional Water Planning Commission will be funding the development of a Watershed Management and Protection Plan for Tributaries to the Truckee River which will include a Best Management Practices Handbook of Low Impact Development designs applicable to the Truckee Meadows.

ROOF RUNOFF CONTROLS SC-10

Description

Runoff from the roofs of buildings and homes contributes to the volume of storm water runoff as well as acting as a source of pollutants. Controlling roof runoff by filtering it through vegetated swales, buffers or sand filters, storing it for irrigation, or allowing for infiltration reduces the peak flow rates and volume of storm water runoff and associated pollutants loads. Rainwater collected in rain barrels and cisterns can be used to water gardens and landscaping.

Infiltration trenches and infiltration basins can be applied as methods to infiltrate storm water. These methods require gutter and downspout systems. Benefits of roof runoff controls include decreased use of potable water for irrigation practices, an increase in groundwater recharge, removal of pollutants from storm water runoff, and capture of the first flush pollutants. Onsite retention of a portion of the runoff will also assist by reducing the peak runoff and volume, as well as attenuating the thermal loading associated with the first flush of storm water runoff.

Applications

Appropriate for single-family homes and multi-family developments, commercial and industrial areas. Can be applied in areas of new development or in areas of redevelopment.

Performance Data

The expected range of pollutant removal percentages varies depending upon the combination of roof runoff control technologies used at a site. If vegetated swales or buffers are used, refer to the performance data presented on BMP fact sheets TC-10 and TC-11. If infiltration or media filtration systems are incorporated, refer to the performance data presented in Sections 6.2 and 6.6, respectively.

Limitations

- An uncovered cistern can provide mosquito habitat if it contains standing water.
- Permeability may limit applicability of infiltration trenches and dry wells.
- Infiltration systems have limited applicability in areas with a high groundwater table and can be associated with an increased risk of groundwater quality degradation, particularly if improperly located in areas where spills are likely to occur.

Siting Criteria

- Infiltration systems should be installed a minimum of 10 feet from building foundations and must be installed in well drained soils.
- Pop-up emitters should be located a minimum of 10 feet from building foundations.

ROOF RUNOFF CONTROLS SC-10

Design and Construction Criteria

- Rain barrels and cisterns must be securely covered to prevent vector breeding.
- Rain barrels and cisterns must be child proof.
- Downspouts can be directed towards vegetated swales or buffers, infiltration trenches or basins.
- Splash blocks or gravel splash pads should be used to dissipate runoff energy from downspouts.
- Refer to BMP fact sheets TC-10 and TC-11 for information on the design and construction of vegetated swales and buffers.
- Refer to BMP fact sheets TC-20 and TC-21 for information on the design and construction of infiltration trenches and basins.

Inspection and Maintenance Requirements

- Inspect and maintain rain barrels and cisterns at least twice a year to ensure they are secure, functioning properly, and not breeding mosquitoes.
- Inspect and maintain vegetated swales and buffers as noted on BMP fact sheets TC-10 and TC-11.
- Inspect and maintain infiltration trenches and basins as noted on BMP fact sheets TC-20 and TC-21.

Additional Information

- Installation of plants around the edge of buildings will provide protection against soil erosion and will aid in storm water infiltration.
- Plants installed along a building's drip line should be sturdy enough to handle heavy runoff sheet flows from rooftop runoff.

References

California Stormwater Quality Association (CASQA), 2003. California Stormwater Best Management Practice Handbook, New Development and Redevelopment.

City of Portland, 2000. Stormwater Management Manual, Updated August 2000. Portland, Oregon.

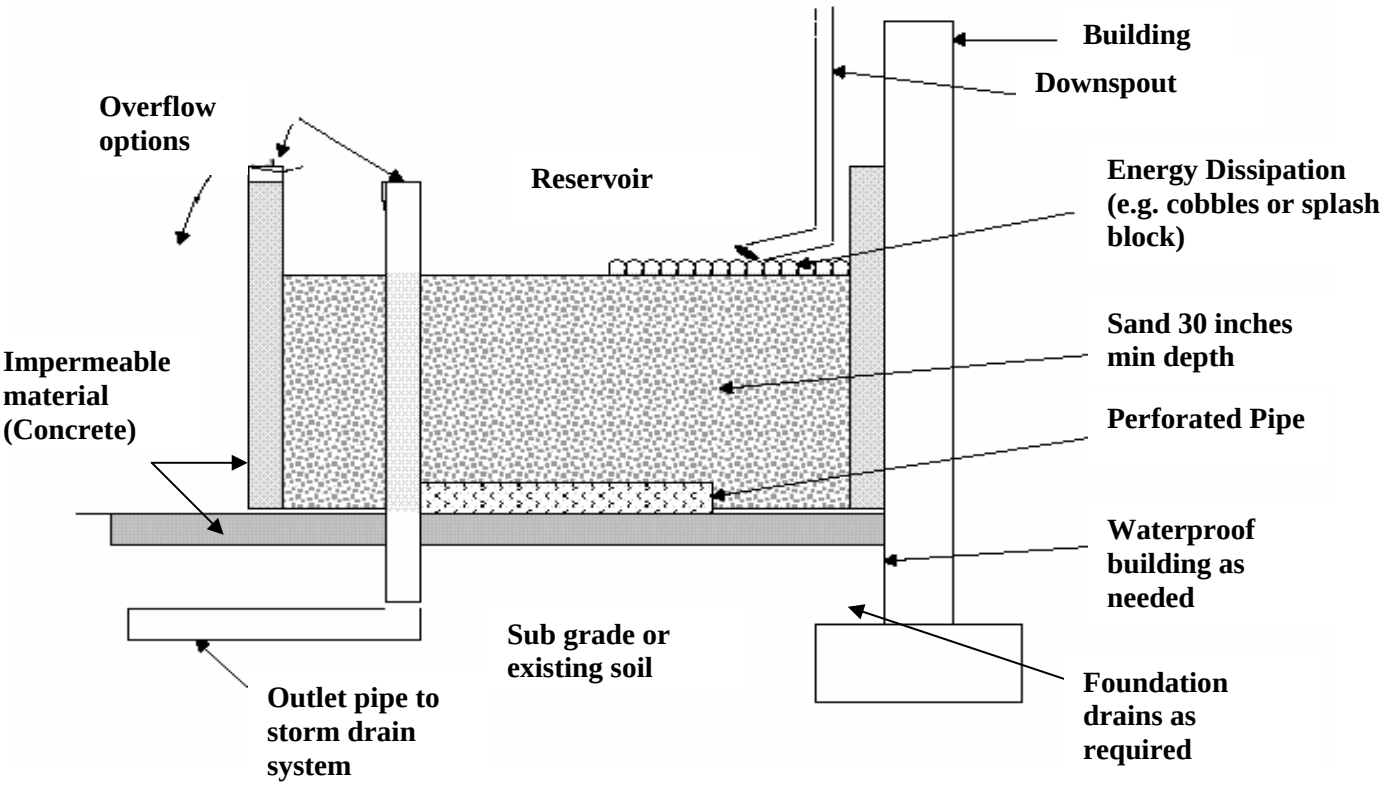

Figure SC-10. Example of a Sand Filter for roof runoff control (modified from Portland, 2000).

EFFICIENT IRRIGATION SC-11

Description

Application of efficient irrigation techniques minimize the waste of water resources and reduce the volume of dry weather flows discharging to the storm drain system. Efficient irrigation techniques include rain and wind-triggered shutoff devices, automatic line break detection shutoff valves and soil moisture sensors. These devices automatically regulate the amount and frequency of irrigation based on climatic conditions and function to provide only the amount water required to sustain vegetation requirements.

Applications

Appropriate at any location that includes irrigated landscaping, including residential, commercial, and industrial sites that are either being developed or redeveloped.

Limitations

- Installation of rain-triggered shutoff devices and automatic shutoff valves involve an initial additional expense; however these costs can be offset through water savings.
- May require additional inspection and maintenance to insure the irrigation system is functioning as efficiently as designed.

Siting Criteria

- Applicable at any location that includes an irrigation system for landscaping.

Design and Construction Criteria

- Install rain-triggered shutoff devices to prevent automatic irrigation during and following precipitation events.
- Install flow reducers or automatic shutoff valves which will shut off the flow in case of a broken line or sprinkler head.
- Customize the irrigation system and watering schedule to the actual water requirements of the vegetation used.
- Set irrigation timing and duration to minimize runoff and to comply with watering restrictions set by the Truckee Meadows Water Authority.
- Choose plant types that are appropriate for local climatic conditions.
- Choose plants that require little to no application of fertilizers or pesticides for healthy growth.
- Minimize runoff by covering areas of bare soil with mulch.

- Provide vegetative buffers along property lines and channel banks to filter out sediments.

Inspection and Maintenance Requirements

- Monitor and maintain the irrigation system to minimize runoff.
- Repair or replace broken pipes, nozzles, or other devices as soon as possible.
- Use alternative environmentally friendly fertilizers or pesticides.

References

California Stormwater Quality Association (CASQA), 2003. Stormwater Best Management Practice Handbook, New Development and Redevelopment.

STORM DRAIN LABELING SC-12

Description

Illegal dumping of wastes into storm drain inlets is a significant problem in some areas. Many times this occurs because polluters are unaware that the storm drain system conveys storm water and wastes directly to rivers, streams and lakes without treatment. To educate the public and reduce the disposal of wastes such as used motor oil into the storm drain system; signs, stencils, markers or labels can be applied as a source control. Storm drain labels can be applied with paint and a stencil, secured with an adhesive, heat applied or stamped into concrete or cast into iron of manufactured drop inlets. Storm drain labels stating educational messages and prohibitions should be placed above or next to storm drain inlets.

Applications

Appropriate in all areas where illegal dumping is possible including residential, commercial, and industrial sites. Reflective materials may help to decrease the occurrence of illegal nighttime dumping in some areas.

Limitations

- Storm drain stencils tend to weather and fade over time.
- If not properly attached with a secure adhesive, storm drain signs, markers or labels may become detached or be subject to vandalism.

Siting Criteria

- Storm drains inlets within new development projects should be clearly marked with storm drain signs, stencils, markers or labels.
- May be applied either on the top or face of curbs above or directly adjacent to storm drain inlets.
- The message should be visible from all angles.

Design and Construction Criteria

- Inquire with local agencies as to whether specific signage and language for storm drain labeling is required.
- Image and wording on the label must be clearly stated.
- Storm drain signs, stencils, markers or labels should be permanent.
- A durable, long lasting adhesive should be used to apply all storm drain signs, markers and labels.

- When stamped into concrete or cast into iron drop inlets, the label should be a minimum of 0.25 inch deep and have a minimum letter height of 1.5 inches.
- Figure SC-12 provides examples of some of the storm drain labels typically used by other communities.
- Bilingual storm drain labels should be used in neighborhoods where English is a second language.

Inspection and Maintenance Requirements

- Storm drain labels should remain readable at all times.
- Inspect storm drain labels every two years and replace or reapply as necessary.

References

California Stormwater Quality Association (CASQA), 2003. California Stormwater Best Management Practice Handbook, New Development and Redevelopment.

Sacramento Stormwater Management Program, 2000. Guidance Manual for On-Site Stormwater Quality Control Measures.

STORM DRAIN LABELING SC-12

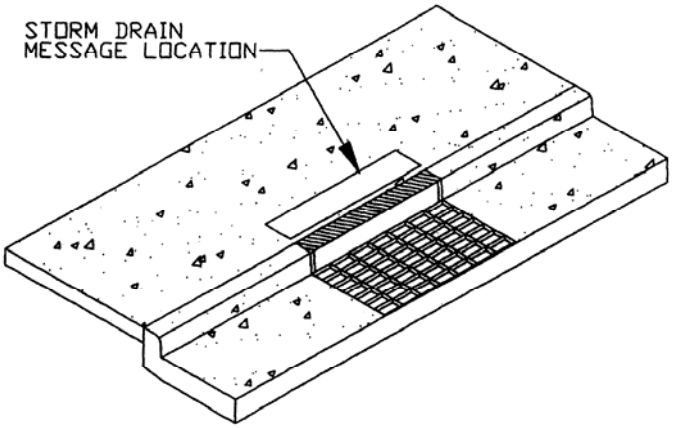

Figure SC-12. Examples of storm drain labels.

Section 5

Source Controls

Section 5: Source Controls

5.0 Introduction

The BMP fact sheets presented in the following sections discuss the operational practices and low technology structural control measures that can be used to prevent or reduce pollutants at the source. They typically can be developed and implemented in a low cost and time effective manner and primarily involve good housekeeping practices (spill prevention, proper outdoor storage methods, and proper cleanup procedures). Implementation of adequate and appropriate source control measures at commercial, industrial and multi-family developments can reduce or eliminate the need for higher cost treatment control measures.

In order to select the appropriate source control measures, the outdoor activities that are conducted at a particular site must be carefully evaluated. The activities that have the potential to contribute significant pollutants to storm water and non-storm water discharges are commonly referred to as "activities of concern." If not managed adequately, these activities may provide sources of pollutants that come in contact with rain or runoff as it drains over the area where the activities are being or have been conducted. These pollutants then leave the site when runoff drains into the municipal storm drain system, resulting in polluted storm water ultimately being discharged to the Truckee River and its tributaries.

The source control measures presented in this manual address the more common activities of concern at commercial, industrial and multi-family developments. There may be other activities of concern at a particular site that are not covered in the fact sheets presented in the following sections that may also need to be addressed.

5.1 Commercial/Industrial Area Source Control BMPs

The BMP fact sheets presented in this section discuss the practices and measures that can be implemented at commercial and industrial areas to prevent or reduce pollutants from the following common activities of concern:

- Outdoor Material Storage
- Outdoor Material Loading/Unloading
- Fueling Areas
- Outdoor Work, Maintenance and Wash Areas
- Spill Prevention, Containment and Cleanup
- Waste Handling and Disposal

OUTDOOR MATERIAL STORAGE SC-20

Description

Improper outdoor storage of materials can provide a source of pollutants for storm water and can have undesired impacts on receiving waters. Material types range from raw materials to finished products depending on the industry involved. Examples may include toxic compounds, oils and grease, heavy metals, nutrients, and suspended solids. Proper containment and coverage of materials stored outdoors can prevent or reduce contamination of storm water runoff and receiving waters.

Applications

Toxic and hazardous materials must be stored in a manner to prevent exposure to rain and storm water runoff. Significant amounts of non-toxic or non-hazardous materials may also have a deleterious effect on receiving waters and should be considered for outdoor material storage controls.

Limitations

- Can potentially create additional impervious surfaces.
- Berms can potentially create drainage management issues.

Siting Criteria

- Materials can be contained and stored using the following: shelving, stacking, tanks, and containers.
- Materials should be covered and/or waters should be captured or diverted around the material storage area.

Design and Construction Criteria

- Storage areas should be sloped toward a dead-end sump.
- Storage areas should be underlain with pavement.
- Other runoff should be directed away from storage areas.
- The roof of the storage area should extend beyond the footprint of the storage area.
- A berm or other secondary containment should be installed around the material storage area to confine any spills or leaks.

Inspection and Maintenance Requirements

- If materials are covered with tarpaulins, frequent inspection may be necessary.

Additional Information

- Spill prevention plans shall be in place where required by local, NDEP, or Federal environmental control regulations.

References

California Stormwater Quality Association, 2003. Stormwater Best Management Practice Handbook, New Development and Redevelopment.

Sacramento Stormwater Management Program, 2000. Guidance Manual for On-Site Stormwater Quality Control Measures.

Urban Drainage and Flood Control District, 1999. Drainage Criteria Manual (V.3). City and County of Denver, Colorado.

OUTDOOR MATERIAL LOADING/UNLOADING SC-21

Description

The loading and unloading of materials occurring on docks, trucks, or around storage areas introduces the risk of spilling or leaking materials. The accumulation of spilled materials around the loading area may be washed away during cleaning or by runoff thereby introducing contaminants into the storm drain system. Certain precautions should be taken to reduce the risk of polluting storm water runoff from material loading/unloading areas.

Applications

- Applicable in industrial and commercial areas undergoing development or redevelopment. Can be applied on maintenance bays, docks, staging areas, and around outside storage areas.

Limitations

- None Known

Siting Criteria

- To be applied on maintenance bays, docks, staging areas, and around outside storage areas.

Design and Construction Criteria

- Loading/unloading areas should be constructed from impermeable surfaces such as concrete or asphalt.
- An overhead cover that extends 3 feet beyond the loading dock is recommended.
- Depressed loading docks should not drain directly into the storm drain system.
- Below-grade loading docks should drain runoff through an infiltration system where practicable. However, limitations exist where toxic, hazardous, or other deleterious materials are being loaded/unloaded.
- A berm to prohibit storm water from surrounding areas from draining onto loading/unloading areas is recommended.
- Downspouts should be directed away from loading/unloading areas.
- An Environmental Control permit may be required prior to connecting a pretreatment system (e.g. oil and water separator) to the sanitary sewer system.

OUTDOOR MATERIAL LOADING/UNLOADING SC-21

Inspection and Maintenance Requirements

- Inspect loading/unloading areas regularly, clean up litter and wastes as soon as possible, and keep spill prevention, containment and cleanup supplies available at all times.

Additional Information

- Follow local codes when designing loading/unloading areas and associated drainage/pretreatment systems.

- Properly dispose of storm water and non-storm water runoff in accordance with local codes and policy. Do not dispose of waters directly into the storm drain system or receiving waters.

References

California Stormwater Quality Association, 2003. Stormwater Best Management Practice Handbook, New Development and Redevelopment.

Sacramento Stormwater Management Program, 2000. Guidance Manual for On-Site Stormwater Quality Control Measures.

Urban Drainage and Flood Control District, 1999. Drainage Criteria Manual (V.3). City and County of Denver, Colorado.

FUELING AREAS SC-22

Description

The potential exists for oils, greases, solvents, car battery acids, and coolants to impact storm water quality at fueling stations. Accidental spills during fueling or during the delivery of fuels as well as rainwater and wash waters running over fueling areas can have a significant impact on the water quality of runoff. Heavy metals and toxic substances in fuels are not easy to remove by storm water treatment devices and thus spill prevention is paramount.

Applications

Can be applied in commercial or industrial areas where fuels are dispensed. This includes gasoline stations and automotive repair shops.

Limitations

- None known

Design and Construction Criteria

- Fueling areas should be paved with a smooth impervious surface such as Portland cement concrete. Asphalt should not be used in the vicinity of fuel dispensers because fuels can dissolve and/or destroy the structural integrity of asphalt.
- The concrete surface should extend a minimum of 6.5 feet from the corner of each fuel dispenser or the length of the hose plus 1 foot, whichever is less.
- An overhanging roof or canopy structure should cover the entire fueling dispensing area and it should not drain onto or toward the fueling area.
- Fueling areas should be separated from the rest of the site by grade breaks and should be on a slight slope to prevent the ponding of water. The dimensions of the overhanging roof or canopy structure should be equal to or greater than the area within the grade break.
- A dead-end sump or an oil and water separator should be used to collect wash runoff and/or spills from fueling dispensing areas and the wastewater contained in the sump or separator should be disposed of properly.
- An Environmental Control permit may be required prior to discharging wastewater from a dead-end sump or connecting an oil and water separator to the sanitary sewer system.
- Storm drains should not be located directly down slope or next to fueling areas.
- Fueling areas must be designed according to local codes and regulations.
- Storm drain seals (drain covers, plugs, or isolation valves) should be provided in case of a spill and/or emergency to prevent pollutants from entering the storm drain system.

FUELING AREAS SC-22

Inspection and Maintenance Requirements

- Inspect dead-end sumps quarterly, or at the appropriate interval to ensure they do not overflow.
- Pump and properly dispose of wastewater contained in the sump at regular intervals.
- Spill cleanup materials should be maintained on site and be readily accessible.
- Any spills should be cleaned up as soon as possible.
- Spills are not cleaned up until the absorbent is picked up and disposed of properly.

References

California Stormwater Quality Association, 2003. Stormwater Best Management Practice Handbook, New Development and Redevelopment.

Los Angeles County, 2002. A Manual for the Standard Urban Stormwater Mitigation Plan (SUSMP), Los Angeles County Department of Public Works, May 2002.

Sacramento Stormwater Management Program, 2000. Guidance Manual for On-Site Stormwater Quality Control Measures.

Urban Drainage and Flood Control District, 1999. Drainage Criteria Manual (V.3). City and County of Denver, Colorado.

OUTDOOR WORK, MAINTENANCE, AND WASH AREAS

SC-23

Description

Contaminants such as oils, grease, metals, phosphates, suspended solids, and nutrients present in work areas and resulting from equipment and automotive maintenance and washing can impact water quality if storm water runoff is not properly conveyed to the sanitary sewer. Sources of contaminants include: cleaning of parts, equipment and vehicles, cleaning of the work area, spilled or dripped fuels, oils or other chemical agents, and the disposal of rags, filters, batteries, and other wastes. Wastes and runoff should be collected and not allowed to infiltrate.

Applications

Applicable in commercial and industrial areas. Includes restaurants, gasoline stations, and automotive repair shops.

Limitations

- Some locations may be required to pre-treat and monitor wash waters entering the sanitary sewer.

Siting Criteria

- Do not locate work, maintenance, or wash areas near storm drains.

Design and Construction Criteria

Work and Maintenance Areas

- Use a prefabricated metal drip pan or underlay the work area with Portland cement concrete.
- Maintenance/work areas should be covered with a roof or canopy.
- Establish a berm around the work area to prevent run-on or runoff.
- Berm and/or cover areas where vehicle parts with fluids are stored.
- Certain regulated industrial activities may require pre-treatment with a structural control prior to discharge to the sanitary sewer.

Equipment and Vehicle Wash Areas

- Wash areas should be self-contained, have a pre-treatment device and properly connected to the sanitary sewer.

- The entire wash area should be covered with a roof to prevent contact with rainwater.
- Wash areas should be paved with Portland cement concrete, bermed, and sloped toward the sanitary sewer or treatment system.
- An Environmental Control permit may be required prior to discharging wastewater from a dead-end sump or connecting an oil and water separator to the sanitary sewer system.
- Wash areas for vehicles should have a minimum width of 15 feet, a minimum length of 25 feet and a paved access.
- Clearly mark wash areas with posted signs.
- Use biodegradable and phosphate-free detergents when possible.
- Use hoses that have nozzles that turn off automatically when not in use.

Inspection and Maintenance Requirements

- Train employees on proper cleaning and maintenance techniques as well as wastewater handling procedures.
- Pre-treatment devices will require inspection and maintenance appropriate to the device (refer to TC fact sheets).

Additional Information

- Contact the local sewer authority to determine if treatment of wash waters is required.
- Wash waters are not considered to be storm water.
- Hazardous and toxic wastes must not enter the storm drain system.
- Accumulated wastewaters must be disposed of according to local codes and regulations.
- Provide drain plugs or valves to prevent spilled materials from entering the storm drain system.

References

California Stormwater Quality Association, 2003. Stormwater Best Management Practice Handbook, New Development and Redevelopment.

Sacramento Stormwater Management Program, 2000. Guidance Manual for On-Site Stormwater Quality Control Measures.

Urban Drainage and Flood Control District, 1999. Drainage Criteria Manual (V.3). City and County of Denver, Colorado.

SPILL PREVENTION, CONTAINMENT, AND CLEANUP SC-24

Description

Containment berms, curbing, and drip pans are methods for controlling and containing spills on commercial and industrial sites. These methods prevent spilled materials from entering the storm drain system. Berming can be either a temporary or permanent feature at a site and can be constructed from a variety of materials including concrete, metal, synthetic liners, or earthen materials.

Applications

To be applied on any commercial or industrial site having the potential to spill materials that will introduce pollutants to the storm drain system.

Limitations

- Containment dikes may be too expensive for small sites.
- Curbing is not effective for holding large spills.
- Drip pans are only applicable for small leaks.

Siting Criteria

- Drip pans should be located where they are easy to remove, clean, and maintain.
- Do not place drip pans next to sidewalks or on uneven surfaces where they have a potential for being overturned.
- Firmly secure drip pans to prevent heavy winds from moving or damaging them.

Design and Construction Criteria

- The floor of the spill area must be sufficiently impermeable. Suggested materials include asphalt or concrete.
- Containment dikes must be capable of containing a spill from the largest storage tank within the potential spill area.
- Curbing should be sized to route spill materials down gradient from the largest container within the spill area to a collection basin.
- Curbing is typically constructed from earth, concrete, metal, asphalt, or other impervious materials.
- Containment dikes may be equipped with normally closed valves to assist with management of retained storm water.

SPILL PREVENTION, CONTAINMENT, AND CLEANUP SC-24

Inspection and Maintenance Requirements

- Drip pans must be inspected and cleaned frequently.
- Drip pans must be secured in bad weather conditions.
- Containment dikes and berm should be inspected after significant storm events and spills to check for leaks or overflows.
- Closely inspect the overflow system to control leaks.
- Visually inspect snowmelt and rainwater present in the spill containment area prior to release. Storm water present in the spill containment area may need to be treated or collected and disposed of properly.

Additional Information

- Sorbents or gelling agents are effective means of controlling spilled materials.
- The type of berm selected will determine the costs of installation and maintenance.
- Local, state, and federal codes and regulations must be followed when removing spilled materials from a site.

References

Idaho Department of Environmental Quality, 2001. Catalog of Stormwater Best Management Practices: For Idaho Cities and Counties. BMP #8 – Spill Prevention and Control. http://www.deq.state.id.us/water/stormwater_catalog/doc_bmp08.asp

Urban Drainage and Flood Control District, 1999. Drainage Criteria Manual (V.3). City and County of Denver, Colorado.

WASTE HANDLING AND DISPOSAL SC-25

Description

Storage areas for industrial or chemical wastes need to be properly maintained to prevent or reduce pollutants from entering the storm water system. Wastes should be stored, treated, or disposed of in a safe and responsible manner consistent with applicable regulations. Pollutant and waste sources may include dumpsters, waste piles, storage of treatment chemicals or residuals, or process wastes. Any wastes spilled or lost from work areas may build-up in soils to later be released during precipitation events effecting storm water quality. Thus, proper management of facilities is vital in preventing storm water pollution.

Applications

Wastes should be properly managed and maintained on all commercial and industrial sites.

Limitations

- None Known

Siting Criteria

- Specific sites should be selected onsite for waste collection and handling.
- Storm drains should not be located within the waste handling area.
- Areas should be elevated if practicable.

Design and Construction Criteria

- Waste handling areas should be underlain by an impervious material such as concrete.
- A barrier (concrete pad or berm) should be constructed around the waste collection area and the area should be graded such that spills or wastes will move toward a dead-end sump.
- Provide overflow protection devices around tanks and the storage area.
- The waste containment area should be covered and is preferably located indoors.
- Waste containers must be covered to prevent rainwater exposure or materials from being blown away.
- Dumpsters should be lined and covered to reduce waste spills and leaks.
- Signs should be posted on dumpsters restricting disposal of hazardous wastes.

WASTE HANDLING AND DISPOSAL SC-25

Inspection and Maintenance Requirements

- Assure that wastes will be collected before overflowing occurs.
- Spills should be cleaned up immediately.

Additional Information

- Provide appropriate instruction and signage regarding waste storage and management.
- Local, state, and federal regulations must be followed when disposing of accumulated wastes.

References

Idaho Department of Environmental Quality, 2001. Catalog of Stormwater Best Management Practices: For Idaho Cities and Counties. BMP #8 – Spill Prevention and Control. http://www.deq.state.id.us/water/stormwater_catalog/doc_bmp08.asp

Sacramento Stormwater Management Program, 2000. Guidance Manual for On-Site Stormwater Quality Control Measures.

Urban Drainage and Flood Control District, 1999. Drainage Criteria Manual (V.3). City and County of Denver, Colorado.

5.2 Multi-Family Area Source Control BMPs

The BMP fact sheets presented in this section discuss the practices and measures that can be implemented at multi-family areas to prevent or reduce pollutants from the following common activities of concern:

- Vehicle Wash Areas
- Waste Handling Areas

VEHICLE WASH AREAS SC-30

Description

Wash waters commonly contain high concentrations of sediments, oils and grease, cleaning chemicals, phosphates, antifreeze and heavy metals and have a negative impact on storm water quality if wash waters are not prevented from entering the storm drain system.

Applications

To be applied in multi-family developments or mobile home parks.

Limitations

- None Known

Siting Criteria

- Wash area should have a paved access.

Design and Construction Criteria

- Wash areas should be paved, bermed, and sloped toward the sanitary sewer or treatment system.
- Wash areas should have a minimum width of 15 feet and a minimum length of 25 feet.
- Place a covered waste container within the wash area.
- Surrounding areas should be sloped away from the wash areas.
- The entire wash area should be covered with a roof to reduce rainwater flows to the storm sewer.
- Clearly mark wash areas with posted signs stating that vehicle fluids should not be dumped in the area.

Inspection and Maintenance Requirements

- None Available

Additional Information

- Contact the local sewer authority to determine if treatment of wash waters is required.

References

City and County of Sacramento, 2000. Guidance Manual for Onsite Stormwater Quality Control Measures, Sacramento Stormwater Management Program.

WASTE HANDLING AREAS SC-31

Description

Residential waste products can have a negative impact on storm water quality. Oils, anti-freeze, batteries, fuels, paints, cleaning agents, weed killers, fertilizers, as well as many other products may contaminate storm water runoff if not properly managed.

Applications

Wastes should be properly managed and maintained in all multi-family or mobile home park areas.

Limitations

- None Known

Siting Criteria

- Follow local codes or ordinances for the design of multi-family waste handling areas.
- Storm drains should not be located within the waste handling area.

Design and Construction Criteria

- Waste handling areas should be underlain by an impervious material such as concrete.
- A barrier (concrete pad or berm) should be constructed around the waste collection area and the area should be graded such that spills or wastes will move toward a dead-end sump.
- Dumpsters should be lined and covered to reduce waste spills and leaks.
- Signs should be posted restricting disposal of hazardous wastes.
- Recyclables should be stored indoors or under an overhang.

Inspection and Maintenance Requirements

- Spills should be cleaned up immediately.
- Wastes should be collected regularly.

Additional Information

- Provide appropriate instruction and signage regarding waste disposal.
- Local, state, and federal regulations must be followed when disposing of wastes.

References

Idaho Department of Environmental Quality, 2001. Catalog of Stormwater Best Management Practices: For Idaho Cities and Counties. BMP #8 – Spill Prevention and Control. http://www.deq.state.id.us/water/stormwater_catalog/doc_bmp08.asp

Sacramento Stormwater Management Program, 2000. Guidance Manual for On-Site Stormwater Quality Control Measures.

Section 6

Public Domain Treatment Controls

Section 6: Public Domain Treatment Controls

6.0 Introduction

This section describes the structural treatment control measures that can be incorporated into new public and private developments, as well as retrofitted into existing developments to meet federal, state, and local storm water quality management objectives. The storm water treatment control measures presented in this section are the more common public domain measures being implemented throughout the country. Numerous studies have shown these control measures to be effective if properly designed, installed and maintained. Therefore, a Nevada registered professional civil engineer must design all public domain treatment control measures using the design criteria presented in Section 3.2 of this manual. In addition, they must be properly operated and maintained in order to function as designed. Failure to properly operate and maintain a storm water treatment control measure can result in no treatment, a discharge of pollutants from the measure into the storm drain system, and possible fines by state or local agencies.

The BMP fact sheets presented in this section discuss the structural treatment controls that can be implemented at a wide variety of land uses. They are grouped into the following general categories:

- Vegetative Treatment Systems
- Infiltration Systems
- Bioretention Systems
- Sedimentation Basins
- Storm Water Ponds and Wetlands
- Media Filtration Systems
- Porous Pavements
- Oil and Water Separators

The details shown on the following fact sheets are intended to show design concepts. Preparation of final design plans, addressing structural details, excavation, foundation preparation, concrete work, steel reinforcing, backfill, metal work and other related appurtenances, including technical specifications, are the responsibility of the design engineer. Alternative designs to those presented in this section may be considered upon approval of the appropriate city or county department. However, alternative designs must incorporate the water quality design criteria presented in Section 3.2.

6.1 Vegetated Swales and Buffer Strips Treatment Systems

Vegetated swales and buffer strips can be effective storm water treatment control systems if runoff depths are shallow and velocities are slow. These systems rely upon the vegetation and the subsoil matrix to filter pollutants from runoff and can also provide infiltration and groundwater recharge. They can provide desirable open space buffers between developed impervious surfaces, the storm drain system, and receiving water bodies. Wherever possible, vegetated swales should be incorporated into natural drainage channels. Vegetative treatment systems reduce the velocity of urban runoff and can serve as part of the storm drain system. They can be accessed by curb cuts or they can replace curbs, gutters and subsurface storm drain pipe systems. Swales sited on existing clayey or silty soils with low infiltration rates (less than 0.5 in/hr or 120 min/in) should also include underdrain systems.

The recommended plant species for vegetated swales and buffer strips should meet the following criteria:

- Native or easily naturalized,
- Low water requirements,
- Low fertilizer requirements,
- Low maintenance requirements, and
- Attractive in all seasons.

Plant species located in the low zone of vegetated swales must be able to withstand periodic flooding. Turf or other soil erosion grasses can also be used in vegetated swales (e.g. grassy swales) and buffer strips. However, turf requires regular irrigation, fertilizer application, and maintenance which may result in reduced pollutant removal effectiveness. Fertilizer use should be minimized in vegetated swales and buffer strips. Slow release fertilizers may be used provided it does not become a pollutant in storm water (e.g. never apply fertilizers when rain is predicted). Herbicides and pesticides are also not recommended unless absolutely required. Maintaining mulch and hand-weeding are the recommended weed-control measures. If herbicides are necessary, use natural alternatives such as corn gluten and insecticidal / herbicidal soap or herbicides that degrade quickly such as glyphosphate (e.g. Roundup). If pesticide use is necessary, biological pest and disease controls are recommended. Sources of information for pesticide natural alternatives include the following:

- *Suppliers of Beneficial Organisms in North America*, available from the California Department of Pesticide Regulation, Environmental Monitoring and Pest Management Branch, 830 K Street, Sacramento, CA, 95814, (916) 324-4100.
- *Directory of Least-toxic Pest Control Products,* available from the Bio-Integral Resource Center, P.O. Box 7414, Berkeley, CA, 94707, (510) 524-2567.

Additional Public Resources that may be used to assist with existing site soil information and the selection of appropriate plant species for the Truckee Meadows are presented in Section 3.1.2 of this manual.

VEGETATED SWALES TC-10

Description

Vegetated swales are also known as biofilters, biofiltration swales, landscaped swales, and grass swales. To be effective at storm water management, vegetative swales should be designed as wide, shallow earthen open channels covered with a dense vegetative growth (commonly grasses) along the bottom and side slopes. Storm water runoff is conveyed along the length of the low slope channel and vegetation traps sediments, decreases the velocity of overland flows, and reduces erosion. Storm water runoff is treated by filtering sediments and associated pollutants through the vegetation and by infiltration into underlying soils. Pollutant removal and treatment efficiency improves as contact time and infiltration increases. For this reason, the length of vegetated swales should not be less than 100 feet. Vegetated swales are considered an LID practice and are relatively simple to design and install. They can serve as part of the storm drain system or can be used in place of curbs and gutters and can be used with other structural treatment controls as part of a treatment train. Vegetative swales can provide some reduction in peak flows during storm events by slowing the velocity of runoff and depending upon the properties of the underlying soils, they can also facilitate infiltration. However they do not typically reduce post construction flow rates and volumes to the levels required by local ordinances or NPDES storm water permit requirements. Therefore, additional detention, retention and/or infiltration facilities typically may need to be added to vegetated swales to address local, regional, and/or state requirements.

Applications and Advantages

Vegetated swales can be used to convey and treat runoff from parking lots, buildings, roadways, and residential properties. They are typically located in parks, parkways or private landscaped areas (in ROW's) and can also be used as pretreatment devices for other structural treatment controls. They can be designed as natural drainage features with temporary irrigation provided to establish the vegetation and annual maintenance, or they can be designed as landscaped areas with permanent irrigation systems.

Performance Data

The literature reported range of removal for various pollutants is as follows:

Pollutant	Percent Removal Efficiency
Total Suspended Solids	60 – 95%
Total Phosphorus	5 – 45%
Total Nitrogen	15 – 65%
Nitrate	-25 – 65%
Metals	20 – 90%

Sources: UDFCD, 1999; CASQA, 2003

The large range in pollutant removal efficiencies reflects differences in design, variable influent concentration levels and flow rates, and the permeability of underlying soils. Pollutant removal

efficiencies for vegetated swales generally increase when underlying soils provide for infiltration. The literature reviewed does not discuss the removal efficiency for organics or petrochemicals. Additional BMPs may be needed for treatment of these pollutants.

Limitations

- Typically requires supplementary irrigation.
- Effectiveness is decreased by compacted soils, frozen ground conditions, short grass heights, steep slopes, large storm events, high discharge rates, high velocities, and a short runoff contact time.
- Requires a sufficient amount of available land area.
- May not be appropriate for industrial sites or locations where spills may occur.
- Infiltration rates of local soils can limit the application of vegetated swales, unless underdrains are installed.
- Effectiveness may be limited in areas where gophers or other burrowing animals are abundant.
- Possible formation of mosquito breeding habitat if water does not drain or infiltrate.

Siting Criteria

- Maximum swale drainage areas is 10 acres. Smaller drainage areas are preferred.
- Not to be applied in areas with adjacent slopes of 5 percent or greater or in areas with highly erodible soils.
- If possible, the preferred installation site is in a natural topographic low to preserve natural drainage and recharge patterns.
- To provide adequate contact time for pollutant removal, generally the minimum length of the swale should be 100 feet.
- Swales should be established with a minimum longitudinal slope of 0.5 percent and a maximum longitudinal slope of 2.5 percent. Swales or swale sections with longitudinal slopes between 2.5 and 5.0 percent may be allowed if check dams are installed to reduce runoff velocity to 2.0 ft/sec or less.

Design and Construction Criteria

- Registered professional civil engineers and landscape architects should work together on the design vegetated swales.
- Design vegetated swales to convey the Water Quality Flow (WQ_F) rate based on the method presented in Section 3.2.1. This method and the following design criteria are embedded in Design-aid Worksheet TC-10 (www.TMstormwater.com)
- If possible, flows in excess of the WQ_F rate should be diverted around vegetated swales with upstream diversion structures.

- If a swale is be designed to both convey and treat the WQ_F rate and to convey the flows produced by larger storm flows, the swale should be designed to safely convey flows produced by the 100-year storm event.
- Trapezoidal or parabolic channels are recommended.
- Swale side slopes should not be steeper than 4H:1V (see Figure TC-10 A).
- The minimum bottom width should be no less than 2 feet (see Figure TC-10A)
- The maximum bottom width should not exceed 10 ft.
- To size the bottom width, use the Manning's equation at the WQ_F with a roughness coefficient (*n*) value of 0.25 for grass and 0.40 for mixed vegetation and rocks[1].
- Improved pollutant removal efficiency occurs with a minimum 10-minute hydraulic residence time at the WQ_F.
- To determine the capacity of the swale to convey peak hydraulic flows, use a roughness coefficient (*n*) of 0.10 with Manning's Equation.
- A design vegetation height of 4 - 6 inches is recommended.
- A diverse selection of low growing plants that thrive under site specific soils and proposed watering conditions should be specified.
- For areas without regular irrigation, use drought tolerant vegetation, however pollutant removal efficiencies will typically be reduced.
- The swale must meet local ordinances and should be included on site plans.
- The swale must not hold standing water for more than 7 days during May through October.
- Effectiveness can be improved by installing check dams at regular intervals.
- A 4-inch diameter PVC under drain should be provided in type C and D soils (e.g. silty or clayey soils) to increase infiltration capacity.
- Swales sited on existing soils with infiltration/percolation rates of 0.5 in/hr (120 min/in) or less should include underdrain systems.
- Fertilizers and soil amendments should be specified based on soil testing results and vegetation requirements. Improper application of fertilizer can result in contamination of stormwater runoff.

Inspection and Maintenance Requirements

- With proper inspection and maintenance, vegetated swales can last indefinitely.
- Proper maintenance includes mowing, weed control, removal of trash and debris, watering during the dry season, and reseeding of non-vegetated areas.

[1] Manning's roughness coefficient (*n*) values used for open channels have historically ranged from approximately 0.02 to 0.10 (see Table 3-2). However, these values were applied to channels designed to efficiently and quickly transport water. For vegetated swales designed to treat storm water quality, higher *n* values should be applied (Minton, 2006).

- When mowing grass, never cut shorter than the design flow (WQ_F) depth, and remove grass cuttings.
- Inspect swales at least twice annually for damage to vegetation, erosion, sediment accumulation and ponding water standing longer than 7 days.
- Periodic litter collection and removal will be necessary if the swale is located adjacent to a main road.
- Sediments should be removed when depths exceed 3 inches.
- If a spill occurs and hazardous materials contaminate soils in vegetated swales, the affected areas should be removed immediately and the appropriate soils and materials replaced as soon as possible.

References

California Stormwater Quality Association (CASQA), 2003. California Stormwater Best Management Practice Handbook, New Development and Redevelopment.

City of Livermore, 2003. South Livermore Valley Specific Plan, Residential Street Parkway and Swale Area Planting Policies and Standards.

City of Livermore, 2005. Bioswale Design Guidance Standard Detail No. L-21.

City and County of Sacramento, 2000. Guidance Manual for Onsite Stormwater Quality Control Measures, Sacramento Stormwater Management Program.

Minton, G.R., 2006. Stormwater Treatment, Biological, Chemical and Engineering Principles.

Stormwater Quality Design Manual for the Sacramento and South Placer Regions, February 2007 Public Review Draft.

Urban Drainage and Flood Control District (UDFCD), 1999. Urban Storm Drainage Criteria Manual, Volume 3 – Best Management Practices. Denver, Colorado.

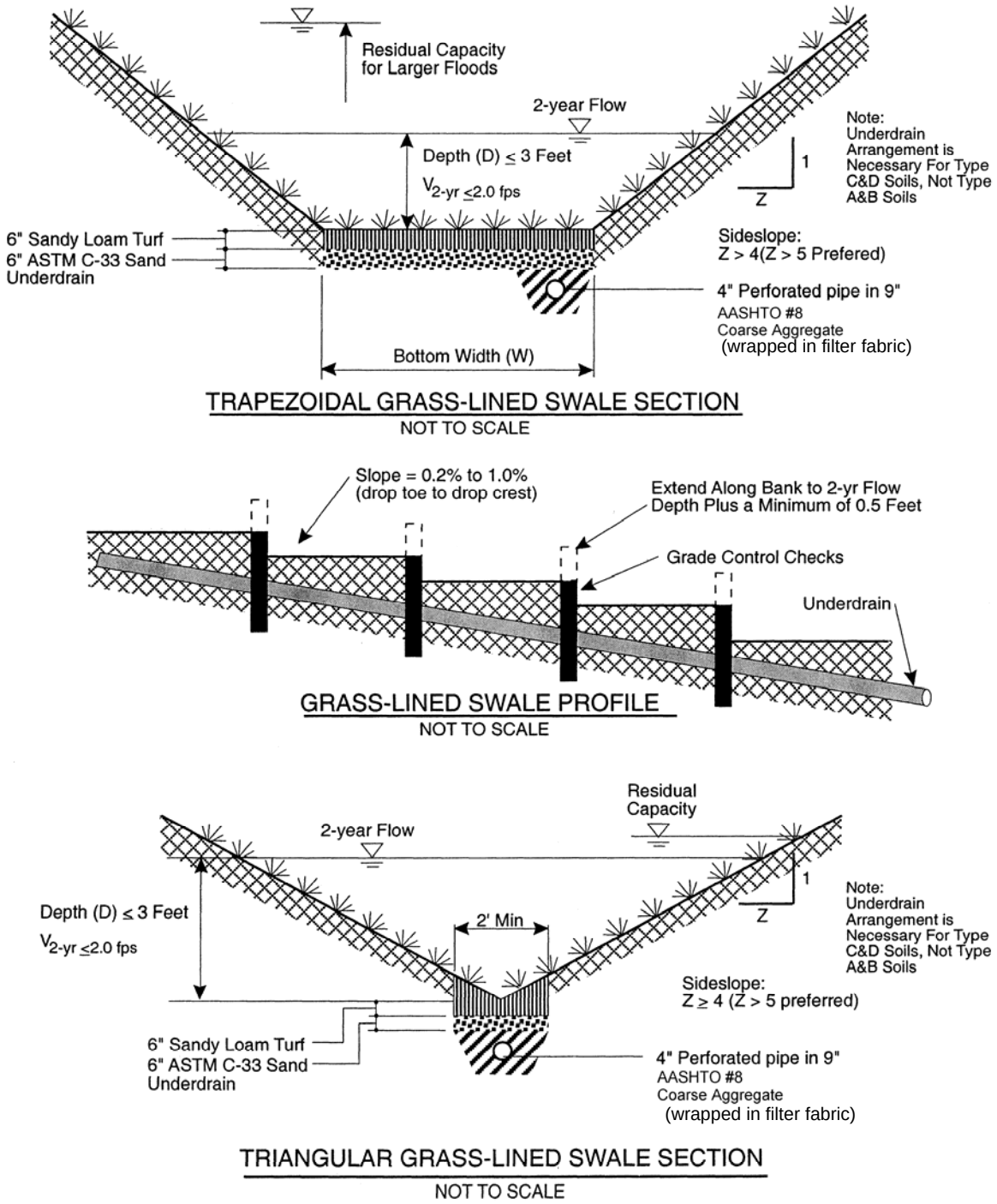

Figure TC-10 A. Typical design and structure of a Vegetated Swale (modified from UDFCD, 1999).

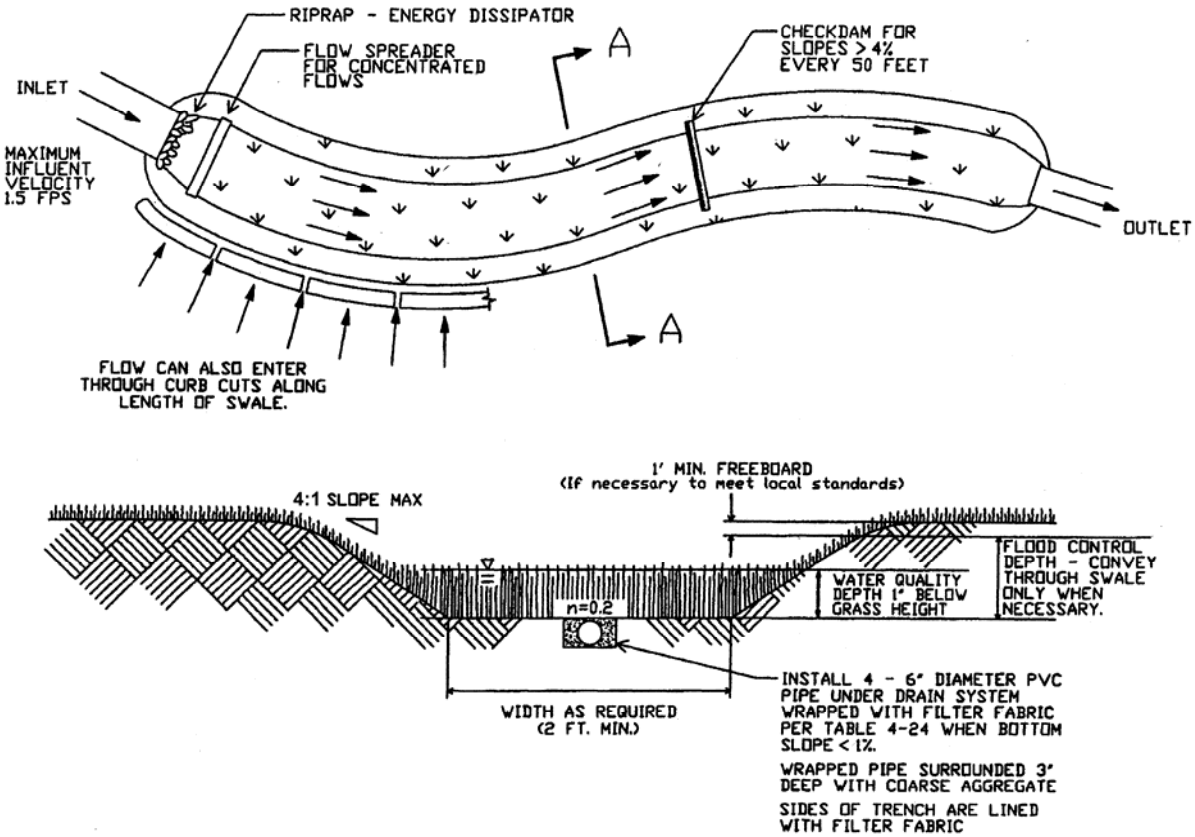

NOTES:

1. An energy dissipator and flow spreader should be installed at the entrance to the swale to reduce velocity and evenly distribute flows across the swale.
2. Maximum allowable side-slope 4H:1V
3. Grass height maintained in accordance with design specifications. Design grass height between 4 to 6 inches.
4. Flow height to be one-inch below design grass height for water quality design storm flow (2 year - 6 hour storm). Use a Mannings roughness coefficient of 0.2 to design for water quality flow through the swale vegetation.
5. n value above water quality height determined based on type of vegetation used. Typical value: 0.035
6. If the swale bottom slope exceeds 4% or soils very permeable, install check dams every 50 feet to slow the velocity to prohibit scouring and promote infiltration.
7. If the swale bottom slope is less than 1% install under drain system to prevent standing water.
8. Flows in excess of water quality flow should be diverted around the swale. If necessary for swale to convey flood waters, provisions shall be made to ensure conveyance in accordance with City or County Standards. Provide 1 ft. freeboard if necessary for flood control.

Figure TC-10 B. General design guidelines for a typical Vegetated Swale (modified from Sacramento, 2000).

VEGETATED BUFFER STRIPS TC-11

Description

Also known as filter strips, or grassed buffers, vegetated buffer strips consist of dense turf surfaces that can be interspersed with shrubs and trees to improve aesthetics and provide shade. They are gently sloping and uniformly graded and provide storm water treatment to relatively small drainage areas. Vegetated buffer strips slow the velocity of runoff waters to promote infiltration and the filtration of sediments and pollutants. They require sheet flow to function properly and often require a flow spreader to evenly distribute runoff across the width of the buffer. Vegetated buffer strips can be used as pretreatment devices for other treatment controls and can also be combined with riparian zones for treating sheet flows and stabilizing channel banks adjacent to drainageways and receiving water bodies. In the semi arid climate of the Truckee Meadows, irrigation is typically required to maintain a healthy and dense vegetative cover capable of withstanding the erosive forces of runoff from adjacent impervious areas.

Applications and Advantages

Vegetated buffer strips are appropriate in the Truckee Meadows along the edge of residential and commercial developments where irrigated landscaping is planned. They are commonly applied along roadside shoulders in humid areas and have historically been used in agricultural practices.

Performance Data

The literature reported range of removal for various pollutants is as follows:

Pollutant	Percent Removal Efficiency
Total Suspended Solids	10 - 74
Total Phosphorus	0 - 10
Total Nitrogen	0 - 15
Total Recoverable Zinc	0 - 10

Sources: UDFCD, 1999; CASQA, 2003.

Pollutant removal depends on factors such as soil permeability, land uses and slopes of adjacent drainage area, runoff volumes and velocities, the flow path across the buffer strip and the type and density of the vegetation used. The general pollutant removal efficiency for both particulate and soluble pollutants is low to moderate.

Limitations

- Typically requires supplemental irrigation.
- A uniformly graded thick vegetative cover is required to function properly.
- May not be applicable adjacent to industrial sites or locations where spills may occur.
- Buffer strips are not capable of treating storm water from large drainage areas.
- It may be difficult to establish the level slopes necessary for buffer strips.
- Sheet flow is required.
- Drainage area is limited due to the sizing requirements for a buffer strip.
- Cannot be applied in areas with highly erodible soils.

Siting Criteria

- Avoid areas that are highly trafficked, both by automobiles and people.
- Limited to areas with gently sloping surfaces where vegetation is hearty and shallow flow occurs.
- Best suited for treating runoff from roads, roofs, small parking lots, and pervious surfaces.
- Impractical in highly urban areas with little pervious ground.
- Vegetated buffer strips do not increase water temperatures and thus are useful for protecting cold-water streams.
- The seasonally high groundwater table should be a minimum of 3 feet below the buffer strip to ensure proper drainage.

Design and Construction Criteria

- Use Design-aid Worksheet TC-11 (www.TMstormwater.com)
- Registered professional civil engineers and landscape architects should work together on the design vegetated buffer strips.
- Slopes should not be greater than 4 percent (2 to 4 percent is preferred).
- Maximum drainage area is 5 acres.
- Sheet flow must be maintained across buffer strips.
- To create sheet flows install a level spreader at the top edge of the buffer strip along a contour. A porous pavement strip may be used to create sheet-flow conditions.
- Channelized flow across buffer strips should not be permitted.
- The top of the vegetated buffer strip should be installed 2 – 5 inches lower than the impervious surface that is being drained.
- If supplemental irrigation is not available, use drought tolerant species in the buffer strip to minimize irrigation in dry climates.

- If seeds are used to plant the vegetated buffer strip, they will need to be protected with mulch for a minimum of 75 days.
- The hydraulic load should not exceed 0.05 cfs/linear foot of the vegetated buffer strip during the 2-year storm (WQ_F) to maintain a sheet flow of 1 inch or less trough dense grass that is at least 2 inches high.
- The minimum length of a vegetated buffer strip (normal to flow) should be determined using the following equation:

$$L_G = WQ_F / 0.05$$

Where: L_G = minimum design length (ft)

WQ_F = water quality flow (cfs)

- The minimum width of a vegetated buffer strip (in the direction of flow) should be determined based on the flow conditions upstream of the buffer strip.
- For a sheet flow control level spreader, use the following equation:

$$W_G = 0.2L_L \text{ or 8 feet (whichever is greater)}$$

Where: W_G = width of the buffer strip

L_L = the length of the flow path over the upstream impervious drainage area (ft)

- For a concentrated flow control level spreader, use the following equation:

$$W_G = 0.15(A_t / L_t) \text{ or 8 feet (whichever is greater)}$$

Where: A_t= the drainage area (ft^2)

L_t = the length of the drainage area (normal to flow) adjacent to the buffer strip (ft)

- Increasing the width (W_G) will increase runoff contact time, filtration of particulates and pollutants, and infiltration of runoff.
- A vegetated swale can be used to collect outflow from a buffer strip and can provide additional treatment prior to conveying flows to the storm drain system or receiving waters.

Inspection and Maintenance Requirements

- Required maintenance includes weed removal as well as mowing and irrigation of grasses.
- Grasses or turf should be maintained at a height of 2 – 4 inches.
- Buffer strips should be irrigated during the dry season.
- Trash, litter, rocks, and branches should be frequently collected from buffer strips, especially those located along highways.
- Regularly inspect buffer strips for pools of standing water that may be acting as mosquito breeding habitat.

- Buffer strips should be inspected at least two times a year, preferably before and after the winter/wet season.
- Sediments that accumulate along the upstream edge of buffer strips and/or in level spreaders should be collected and removed at least once a year.
- The owner/operator of the property must be responsible for maintaining vegetated buffer strips.
- If a spill occurs and hazardous materials contaminate soils in vegetated buffer strips, the affected areas should be removed immediately and the appropriate soils and materials replaced as soon as possible.

References

California Stormwater Quality Association (CASQA), 2003. Stormwater Best Management Practice Handbook, New Development and Redevelopment.

Idaho Department of Environmental Quality, 2001. Catalog of Stormwater Best Management Practices: For Idaho Cities and Counties. BMP #39 – Vegetative Filter Strip. http://www.deq.state.id.us/water/stormwater_catalog/doc_bmp39.asp

Sacramento Stormwater Management Program, 2000. Guidance Manual for On-Site Stormwater Quality Control Measures.

Urban Drainage and Flood Control District (UDFCD), 1999. Drainage Criteria Manual (V.3). City and County of Denver, Colorado.

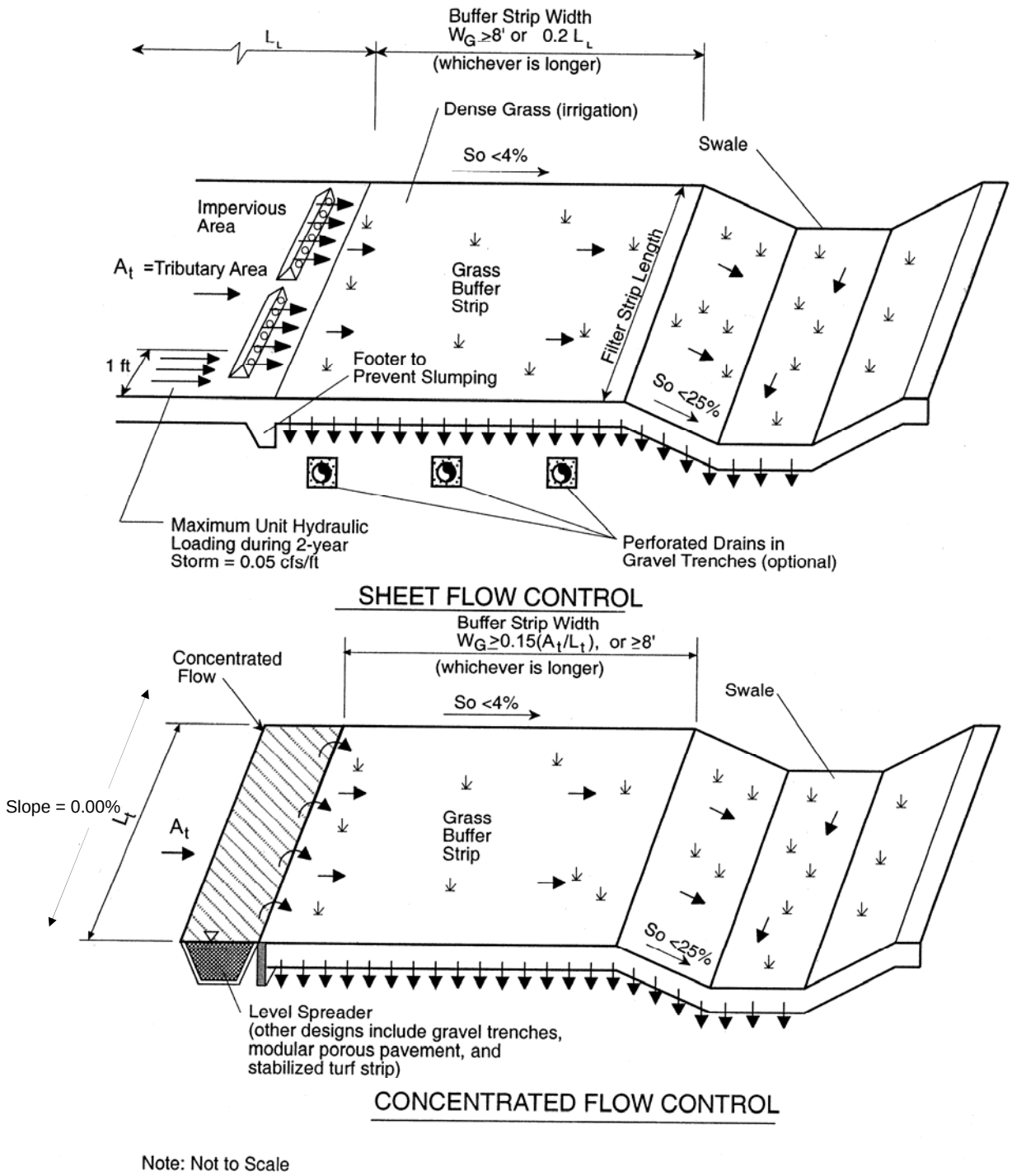

Figure TC-11. General design guidelines for a typical Vegetated Buffer Strip (modified from UDFCD, 1999).

6.2 Infiltration Systems

Infiltration systems allow storm water to slowly enter the ground and migrate downward through the unsaturated zone while sediments and associated pollutants are retained in the near surface soils. Infiltration trenches and basins are examples of engineered facilities designed to treat storm water through the process of infiltration. The process of infiltration can also provide additional treatment effectiveness for many structural treatment controls. Pretreatment of urban runoff using vegetated swales, buffer strips, or detention basins can be important components of infiltration systems by limiting the amount of coarse sediment entering infiltration systems which can clog and render the measures ineffective. Typically infiltration systems are very effective at removing pollutants from storm water and numerous studies have shown that infiltration of storm water presents only a minor risk of contaminating either groundwater or soil. Natural soils are typically very effective at removing pollutants from storm water because they utilize a number of natural processes such as physical filtering, ion exchange, adsorption, biological processing, conversion, and uptake. If however there is a high potential for spills that may be conveyed directly to the storm drain system or a structural treatment control, such as at some industrial outdoor work and maintenance areas, infiltration systems should not be implemented. In this case, runoff should be routed to the sanitary sewer system or to another type of treatment control measure that does not allow for infiltration.

As a preliminary screening tool, the Southern Washoe County Groundwater Recharge Analysis (Kennedy/Jenks, 2001) should be reviewed prior to considering infiltration devices for new developments. In areas noted as having suitable recharge conditions, the use of infiltration systems should be encouraged. A minimum of three hydraulic conductivity tests should be conducted at each proposed infiltration system site. The minimum acceptable hydraulic conductivity for infiltration systems is 0.5 in/hr (120 min/in).

Numerous studies have shown that storm water infiltration BMPs are effective at removing pollutants from urban runoff and typically present only a minor risk of contaminating either soil or groundwater. A comprehensive study of shallow infiltration systems with some sediment pretreatment conducted by the U.S. EPA indicated that of the 25 constituents listed, only one had a “high” potential (Chloride), and only two had “moderate” potentials (Fluoranthene and Pyrene) for polluting groundwater (Pitt et al., 1994). Pentachlorophenol, Cadmium, Zinc, Chromium, Lead, and all of the pesticides listed were classified as having a “low” contamination potential. In addition Nitrate, which is soluble and mobile was only given a “low/moderate” potential. Legret et al. (1999) concluded that the “long-term pollution risks for both soil and groundwater are low” for stormwater infiltration systems and that “metals are generally well retained in the upper layers of 0 to 8 inches of the soil.” A study of a thirty year-old storm water infiltration BMP by Barraud et al. (1999) found that both metal and hydrocarbon concentrations in the soil under the infiltration device decreased rapidly with depth “to a low level after a few decimeters down” (3 dm = 1 ft). A study of the infiltration of highway runoff by Dierkes and Geiger (1999) found that polycylcic aromatic hyrdrocarbons (PAH) were effectively removed in the upper 4 inches of the soil and that runoff that had passed through 14 inches of soil met drinking water standards for Cadmium, Zinc, and Copper. The high pollutant removal efficiency of storm water infiltration BMPs is due to the retention capacity of soils and a number of natural processes including physical filtering, ion exchange, adsorption, biological processing, conversion, and uptake.

INFILTRATION TRENCHES TC-20

Description

An infiltration trench is a trench that has been lined with filter fabric and filled with a rock matrix to form a subsurface basin that captures, filters and infiltrates storm water runoff. Trenches allow for water retention such that the partial or total infiltration of storm water runoff into the underlying soil occurs. Infiltration trenches function to remove pollutants in storm water through the processes of adsorption, precipitation, filtering, and bacterial degradation. Efficiency of pollutant removal depends upon the types and concentration of pollutants in the storm water influent, the porosity of rock matrix, and the infiltration capacity of the underlying soils. However, the concentration of most pollutants in storm water typically decreases rapidly within the first one foot of soil matrix.

Applications and Advantages

Infiltration trenches typically drain areas less than 5 acres in size. Their relatively small size allows them to fit easily along the margins, perimeter, and unused sections of developed sites and thus they are a good choice for retrofitting. They are commonly installed in median strips or in parking lot islands.

Performance Data

The literature reported range of removal for various pollutants is as follows:

Pollutant	Percent Removal Efficiency
Total Suspended Solids	75 - 90
Total Phosphorus	50 - 70
Total Nitrogen	45 - 60
Metals	75 - 90
BOD	70 - 80
Bacteria	75 - 90

Source: Schueler, 1987

Pollutant removal efficiency can be improved by adding organics and loam to the subsoil.

Limitations

- Do not install in areas with highly erodible soils.
- Do not apply on slopes greater than 20 percent.
- Infiltration rates of existing site soils must be a minimum of 0.5 in/hr (120 min/in) and a maximum of 2.4 in/hr (25 min/in).
- High failure rates are common in areas with inappropriate soils and subsurface conditions.
- Should not be applied in areas with clay or silty soils.

- Frozen conditions can severely impact the pollutant removal efficiency of infiltration trenches.
- Individual infiltration practice should not be larger than 5 acres.

Siting Criteria

- Investigate the underlying soil conditions of the proposed trench location.
- Infiltration trenches should not be installed at sites with Hydrologic Soil Types C or D.
- Do not install in fill areas or on slopes greater than 20 percent.
- Do not install within a wellhead protection zone.
- Seasonally high groundwater should not be within 3 ft of the bottom of the infiltration trench.
- Due to the potential of groundwater to contamination, infiltration trenches should not be installed in areas of high-risk land use such as near gas stations or heavy industrial sites where hazardous or toxic materials may be stored.
- Infiltration trenches should be installed at least 100 ft upslope or 20 ft downslope from building foundations.

Design and Construction Criteria

- Use Design-aid Worksheet TC-20 (www.TMstormwater.com)
- Registered professional civil engineers should design infiltration trenches.
- The locally available sand and gravel is typically washed with a high Ph, recycled wastewater. Sand and gravel **must** be rinsed with potable water prior to installation and construction of the sand filter.
- Size the infiltration trench to capture and treat the Water Quality Volume (WQ_V) using the method outlined in Section 3.2.2.
- Flows in excess of the WQ_V should be diverted around the infiltration trench with an upstream diversion structure.
- A 12 inch filter layer consisting of pea gravel specified by Class B backfill in accordance with Section 200.03.03 of the Standard Specifications for Public Works Construction (SSPWC) should be installed at the top of the trench to maximize pollutant removal and improve sediment filtering in the top of the trench.
- A filter fabric should be installed below the filter layer above the trench rock matrix, to retain sediment and reduce potential for clogging.
- To allow infiltration and prevent clogging, the filter fabric should be woven geotextile fabric layer such as SI Corporation Geotex 117F or an approved equivalent.
- The rock matrix should consist of Class D backfill in accordance with Section 200.03.05 of the Standard Specifications for Public Works Construction (SSPWC). This material is a nominal 1 ½ inch diameter clean stone.
- Void space of the rock aggregate should be between 0.30 and 0.40.

- A 6 to 12-inch sand filter layer meeting the grading requirements of fine aggregate in Section 200.05.04 of the SSPWC or permeable filter fabric should be installed on the bottom of the trench between the subbase and the trench rock matrix.
- Determine the trench volume by assuming that the WQ_V will fill the void spaces of the rock matrix. Compute the porosity of the rock matrix based on the materials used.
- Check with the jurisdictional authority for applicable permitting requirements.
- The trench should be designed to drain the entire water quality volume within a minimum of 48 hours and a maximum of 7 days.
- From May to October, water should not be allowed to pond for longer than 7 days.
- Sufficient technical knowledge of the vertical and lateral movement of infiltrated runoff through soil and the interaction with groundwater should be established through a geotechnical investigation.
- Minimum acceptable hydraulic conductivity is 0.5 in/hr (120 min/in) as tested with a minimum of three in-hole conductivity tests.
- Determine the depth of the trench (D) based on the available surface area (SA) using the following equation:

$$D = V_T / SA$$

Where: V_T = total trench volume (ft^3)

$V_T = WQ_V$ / porosity (ft^3)

porosity = void space of the rock matrix (unitless)

- The walls and bottom of the trench should be lined with filter fabric to prevent migration of fine-grained sediments.
- To allow infiltration and prevent clogging, the filter fabric should be woven geotextile fabric layer such as SI Corporation Geotex 117F or an approved equivalent.
- Berms should be created around the infiltration basin during construction to ensure that no sediment or runoff enters the filter media.
- During construction, an easily removable filter cloth can be installed over the rock matrix to prevent clogging of the trench from construction related sediments.
- Floor of the infiltration basin should not exceed a 1 percent slope.
- At least one observation well should be installed in the infiltration trench to monitor drainage and rates of sediment accumulation.
- Provide pretreatment such as grassed swales or vegetated filter strips designed to reduce the sediment load on the trench.

Inspection and Maintenance Requirements

- Life span of infiltration trenches ranges from 5 – 15 years, depending on maintenance.
- Inspect following major storm events during the first year after installation.
- Once the infiltration rate is stable, monitoring can be reduced to twice a year.

- Inspect for water levels in the trench, clogging of inlets and outlets, accumulation of sediments, and ponding of water on the surface.
- Non-routine maintenance involves rehabilitation of the trench if it becomes clogged. Clogging is most likely to occur in the top surface of the trench, between the filter fabric and the top gravel layer. Clogging can be alleviated by removing the top layer of gravel, removing the clogged filter fabric and replacing it, and either cleaning or replacing the top gravel layer.
- Check with the jurisdictional authority for applicable permitting requirements.
- If a spill occurs and hazardous materials contaminate sands or gravels in infiltration trenches, the affected areas should be removed immediately and the appropriate soils and materials replaced as soon as possible.

References

Barraud et al., 1999. The Impact of Intentional Stormwater Infiltration on Soil and Groundwater, Water Science and Technology. Vol. 39, No. 2, pp. 185-192.

California Stormwater Quality Association (CASQA), 2003. Stormwater Best Management Practice Handbook – New Development and Redevelopment.

City and County of Sacramento, 2000. Guidance Manual for Onsite Stormwater Quality Control Measures.

Dierkes and Geiger, 1999. Pollution Retention Capabilities of Roadside Soils, Water Science and Technology. Vol. 39, No. 2, pp. 201-208.

Legret et al., 1999. Simulation of Heavy Metal Pollution from Stormwater Infiltration through a Porous Pavement with Reservoir Structure, Water Science and Technology. Vol. 39, No. 2, pp. 119-125.

Metropolitan Council. 2001. Minnesota Urban Small Sites BMP Manual.

Pitt et al., 1994. Potential Groundwater Contamination from Intentional and Nonintentional Stormwater Infiltration, U.S. Environmental Protection Agency's Risk Reduction Engineering Laboratory, May 1994. EPA/600/SR-94/051.

Schueler, T.R. 1987. Controlling Urban Runoff: A Practical Manual for Planning and Designing Urban BMPs. Metropolitan Washington Council of Governments, Washington, DC.

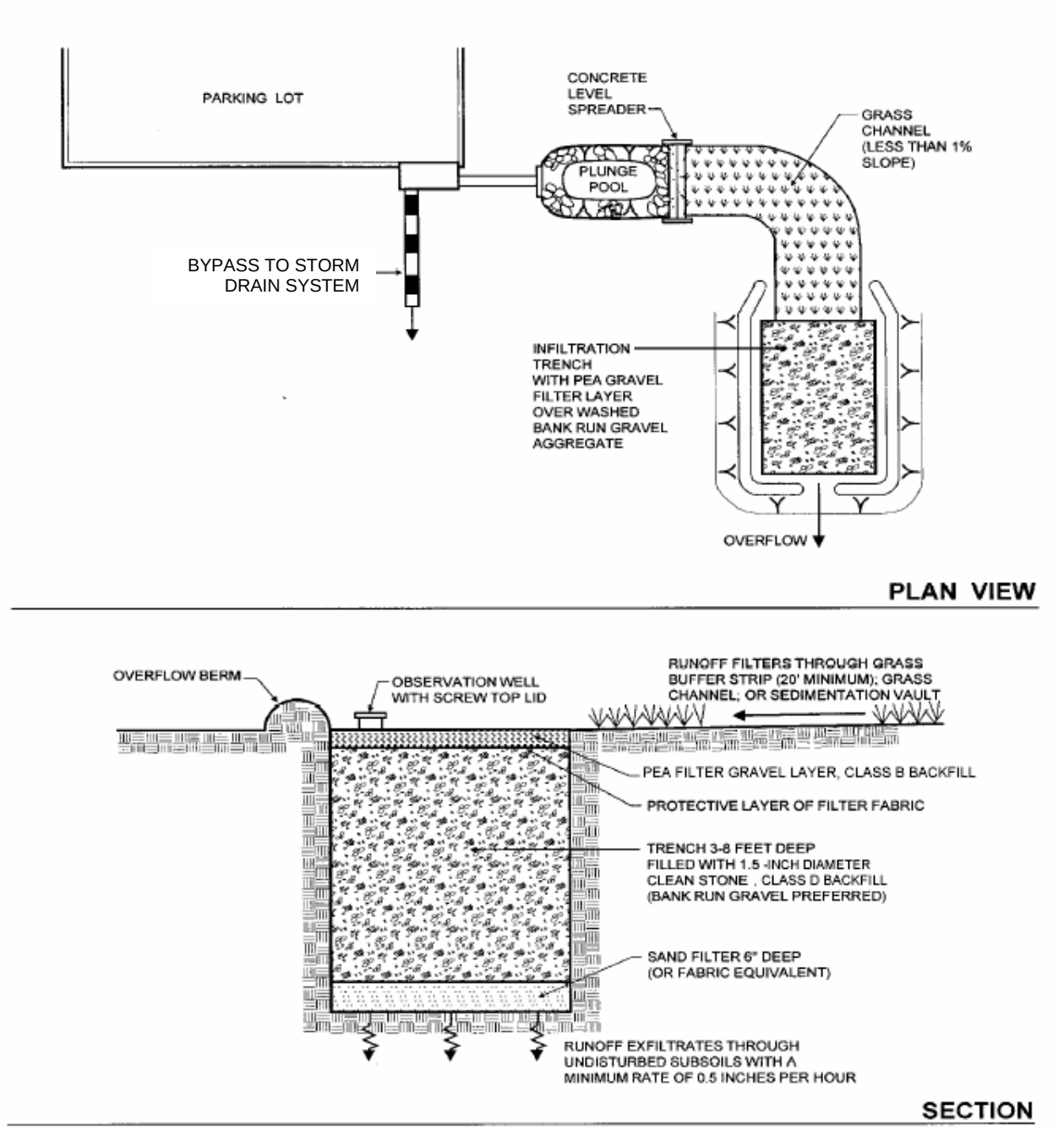

Figure TC-20A. Example of an Infiltration Trench with an energy dissipation device and a bypass structure (modified from CASQA, 2003).

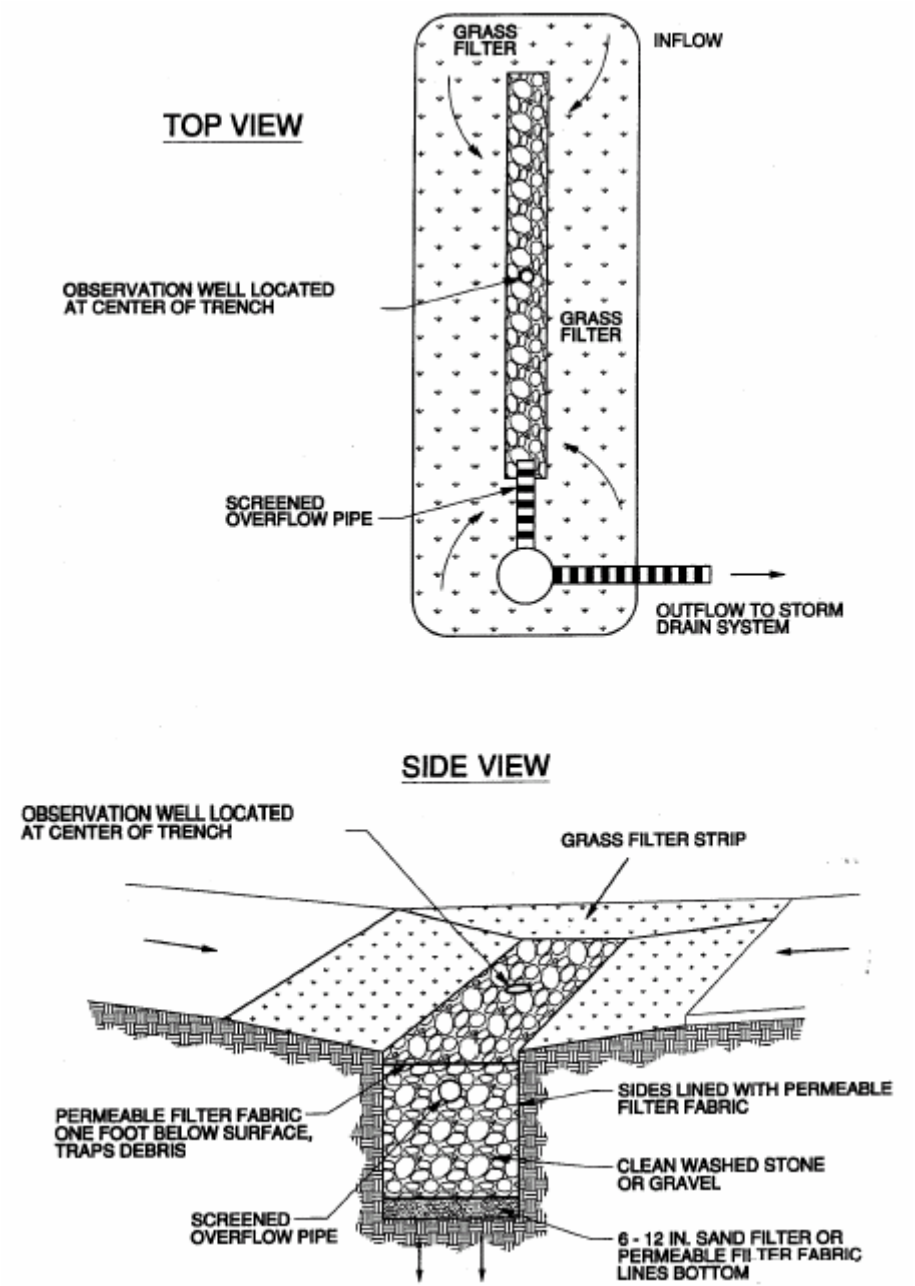

Figure TC-20B. Example of a median strip Infiltration Trench with a grass buffer strip (modified from Sacramento, 2000).

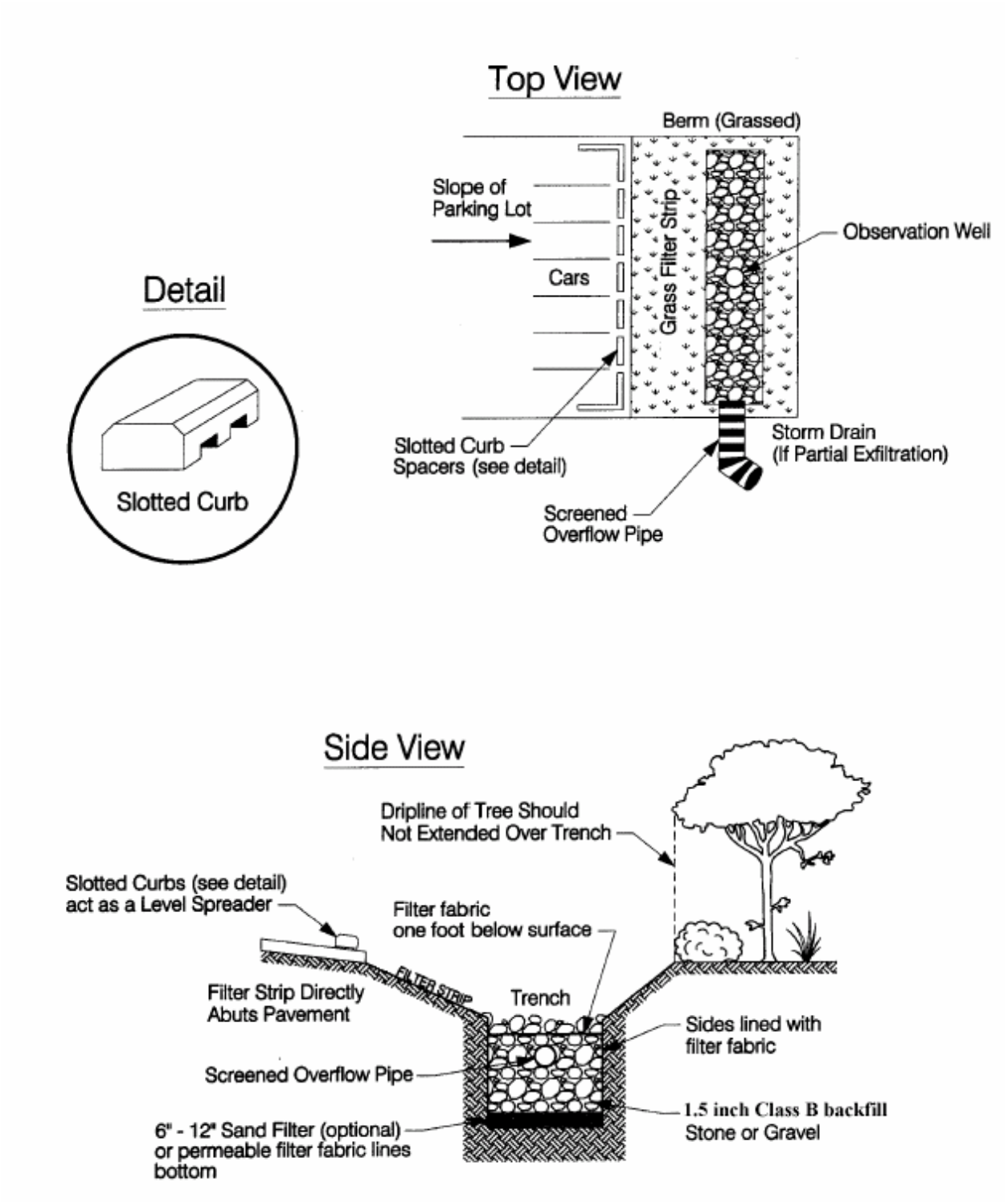

Figure TC-20C. Example of a parking lot Infiltration Trench with a grass buffer strip (modified from Sacramento, 2000).

INFILTRATION BASINS TC-21

Description

Infiltration basins capture storm water runoff and allow it to infiltrate into the ground. They are similar to sedimentation basins or detention basins, however their purpose is to not only detain the water but also to promote infiltration. They are also similar to infiltration trenches, however they can use a wider variety of filter media, can be vegetated on the bottom and can serve larger drainage areas. Pollutants such as suspended solids, metals, nutrients, and bacteria are removed through sedimentation, adsorption, and physical filtration through permeable media and soil thereby improving water quality.

Applications and Advantages

Infiltration systems are applied in areas with well-drained and pervious soils. They are typically applied to drainage areas ranging between 5 and 50 acres. On select sites, it is relatively easy to incorporate an infiltration basin into a site's open space design and layout. Infiltration basins are ideal for areas adjacent to roadways and near interchanges. However, they should not be used in industrial or commercial areas where hazardous or toxic materials are stored outdoors and the potential for spills is relatively high.

Performance Data

Infiltration basins can provide 100 percent reduction in pollutant loading directly to surface waters. Infiltration basins can also provide high pollutant removal efficiency for particulates and moderate efficiency for soluble pollutants when functioning as designed. Actual loading to the subsurface may vary significantly depending on site-specific conditions. Studies in the Pacific Northwest have shown improved long-term performance for basins developed in highly permeable soils.

The literature reported range of removal for various pollutants is as follows:

Pollutant	Percent Removal Efficiency
Total suspended solids	55 – 75
Total Phosphorus	45 – 55
Total Nitrogen	10 – 20
Total Recoverable Zinc	30 – 60
Total Recoverable Lead	55 – 80

Source: UDFCD, 1999.

Limitations

- There may be significant concerns regarding the potential to degrade groundwater.
- Should not be applied in locations where hazardous or toxic materials may be stored.
- Areas with highly erodible soils will require greater maintenance.

- Large drainage areas may require a large amount of space for an infiltration basin. Individual infiltration practice should not be larger than 5 acres.
- Not to be applied in areas with existing soil or water contamination.
- Not to be applied in areas with clay or silty soils or in areas of fill.
- Difficult to maintain and restore if clogging occurs.
- Infiltration may not occur under frozen conditions.
- Infiltration basins that incorporate piping that emplaces storm water underground may be subject to Underground Injection Control (UIC) regulations.
- If a spill occurs and hazardous materials contaminate soils, sands or gravels in infiltration basins, the affected areas should be removed immediately and the appropriate soils and materials replaced as soon as possible.

Siting Criteria

- Not to be used in areas where existing site soils have infiltration (percolation) rate of less than 0.5 in/hr (120 min/in).
- Do not install in fill areas or on slopes greater than 15 percent.
- Seasonally high groundwater should not be within 3 feet of the bottom of the infiltration basin.
- Infiltration basins should be installed at least 100 ft from drinking wells, 100 ft from surface water supplies to be used as drinking water, and 50 ft from other surface water supplies.
- Infiltration basins should not be installed within a Wellhead Protection Zone.
- Locate the infiltration basin away from buildings, slopes, wells, and bridge structures.

Design and Construction Criteria

- Use Design-aid Worksheet TC-21 (www.TMstormwater.com)
- Registered professional civil engineers should design infiltration basins.
- Size the basin to capture and treat the water quality volume (WQ_V) using the method outlined in Section 3.2.2.
- Flows in excess of the WQ_V should be diverted around the infiltration basin with an upstream diversion structure.
- The basin should be designed to drain the entire water quality volume within 48 hours and should not exceed a complete drain time of 7 days.
- Sufficient technical knowledge of the vertical and lateral movement of infiltrated runoff through soil and the interaction with groundwater should be established through a geotechnical investigation.
- Minimum acceptable hydraulic conductivity is 0.5 in/hr (120 min/in) as tested with a minimum of three in-hole conductivity tests.

- Installation of an inlet energy dissipation structure is recommended where inflow velocities may cause erosion of the filter media.
- The basin dimensions should be determined using the following equation:

$$A = WQ_V / (k \times t)$$

Where: A = Basin invert area (ft^2)

WQ_V = water quality volume (ft^3)

$k = 0.5 \times K_h$, where K_h is the lowest field measured hydraulic conductivity (in/hr)

t = minimum drain time (48 hours)

- Basin side slopes should be 3H:1V or flatter.
- The slope of the floor of the basin should not exceed 5 percent.
- Disturbed soils within the drainage area of the infiltration basin should be stabilized with vegetation within one week of construction.
- Berms should be created around the infiltration basin during construction to ensure that no sediment or runoff enters the filter media.
- During construction, an easily removable filter cloth can be installed over the permeable media to prevent clogging of the basin from construction related sediments.
- A large area, a flat bottom, and a dense-turf buffer zone will to improve the performance of an infiltration basin.

Inspection and Maintenance Requirements

- Inspect following major storm events during the first year after installation.
- Inspect annually for settling, cracking, erosion, leakage, condition of the riprap, state of the turf vegetation, and amount of sedimentation. If necessary, repair immediately.
- If the drawdown time is more than 7 days, maintenance and replacement of the filter media is required.
- Debris and litter must be periodically removed from the infiltration basin and vegetation should be mowed when growth exceeds 6 inches in height.
- If barren and eroded areas are present in the drainage area directly adjacent to the infiltration basin, vegetation and/or additional stabilization methods may be required to prevent premature clogging.
- Every 5 – 10 years the area should be tilled, fine materials removed and the base of the basin regraded.
- Infiltration basins can be joined with detention basins to improve water quality.
- Vegetation installed within the infiltration basin tends to decrease the rate of clogging.
- A pretreatment device, such as an oil and water separator, may be required in areas where petroleum hydrocarbons in storm water are anticipated.

- If a spill occurs and hazardous materials contaminate soils, sands or gravels in an infiltration basin, the affected areas should be removed immediately and the appropriate soils and materials replaced as soon as possible.

References

California Stormwater Quality Association (CASQA), 2003. Stormwater Best Management Practice Handbook – New Development and Redevelopment.

City and County of Sacramento, 2000. Guidance Manual for Onsite Stormwater Quality Control Measures.

Stormwater Best Management Practices in an Ultra-Urban Setting: Selection and Monitoring, Fact Sheet – Infiltration Basin, http://www.fhwa.dot.gov/environment/ultraurb/3fs2.htm

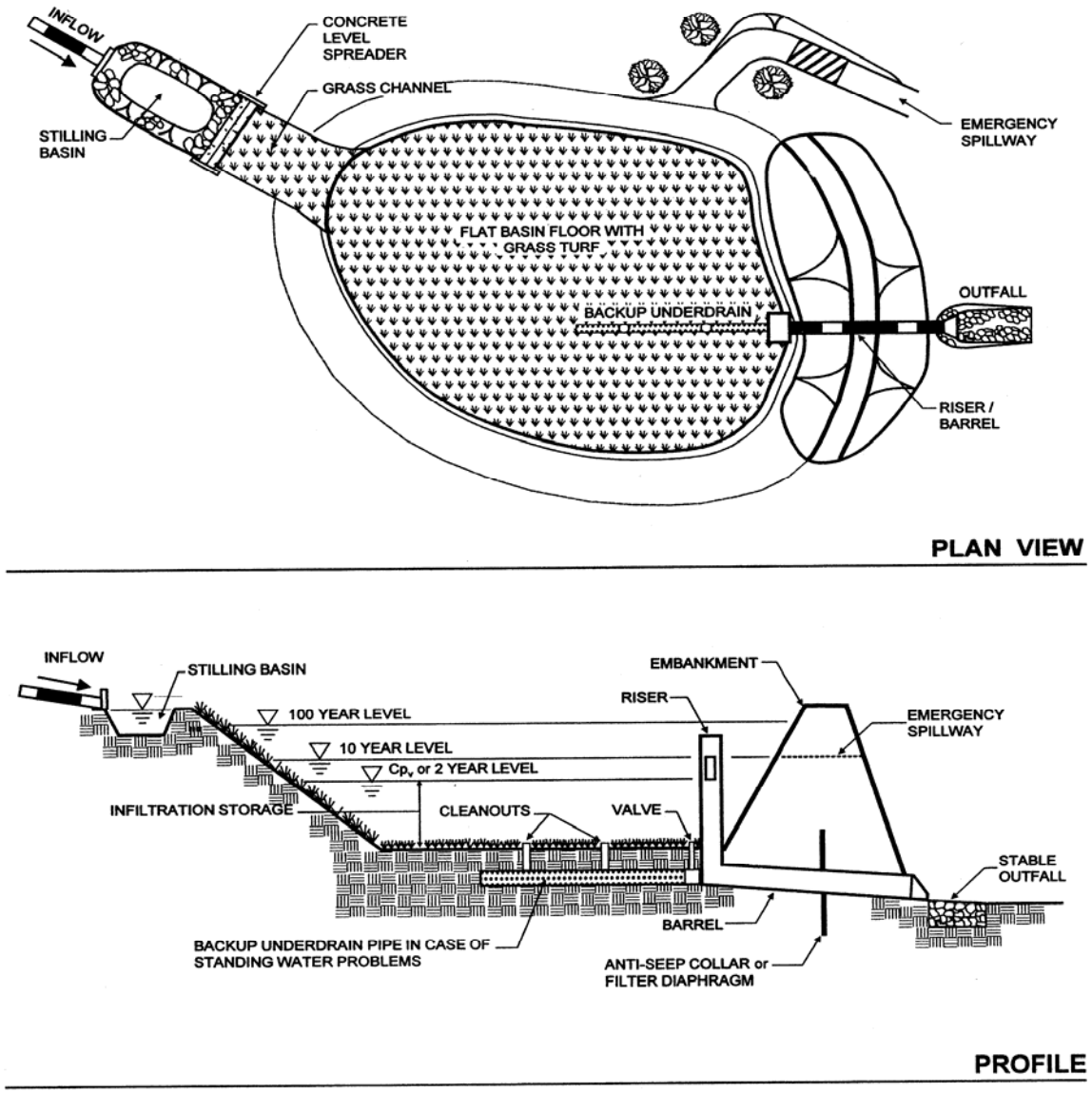

Figure TC-21. Example of a typical Infiltration Basin design (modified from CASQA, 2003).

6.3 Bioretention Systems

Bioretention systems are also referred to as biolfiltration systems, rain gardens or landscape detention systems. They also include tree box filters and storm water planters. Depending on underlying soils and activities and pollutants of concern within the drainage area, infiltration can provide additional treatment effectiveness. These treatment control systems use soil and plant-based filtration to remove pollutants through a variety of physical, biological and chemical treatment processes. Runoff can enter a bioretention system either directly off an impervious surface, via a curb cut or a pipe. The upper surface of bioretention systems is typically located several inches below the grade of the surrounding impervious drainage area. Overflow should be routed to the conventional storm drain system. Infiltration of the treated urban runoff stored in the engineered soils into underlying natural soils or into the storm drain system occurs over a period of days. Bioretention systems sited on existing clayey or silty soils with low infiltration rates (less than 0.5 in/hr or 120 min/in) should include underdrain systems.

The recommended plant species for bioretention systems should meet the following criteria:

- Native or easily naturalized,
- Low water requirements,
- Low fertilizer requirements,
- Low maintenance requirements, and
- Attractive in all seasons.

Plant species located in the low zone of bioretention systems must be able to withstand periodic flooding and prolonged periods of inundation (e.g. up to 7 days). Fertilizer use should be minimized or slow release fertilizers can be used so that it does not become a pollutant in storm water (e.g. never apply fertilizers when rain is predicted). Herbicides and pesticides are also not recommended unless absolutely required. Maintaining mulch and hand-weeding are the recommended weed-control measures. If herbicides are necessary use natural alternatives such as corn gluten and herbicidal/insecticidal soap or herbicides that degrade quickly such as glyphosphate (e.g. Roundup). If pesticide use is necessary, biological pest and disease controls are recommended. Sources of information for pesticide natural alternatives include the following:

- *Suppliers of Beneficial Organisms in North America*, available from the California Department of Pesticide Regulation, Environmental Monitoring and Pest Management Branch, 830 K Street, Sacramento, CA, 95814, (916) 324-4100.
- *Directory of Least-toxic Pest Control Products,* available from the Bio-Integral Resource Center, P.O. Box 7414, Berkeley, CA, 94707, (510) 524-2567.

Additional Public Resources that may be used to assist with existing site soil information and the selection of appropriate plant species for the Truckee Meadows are presented in Section 3.1.2 of this manual.

LANDSCAPE DETENTION TC-30

Description

Landscape detention, also known as bioretention basins or porous landscape detention, consists of a low-lying vegetated area underlain by a sand reservoir and an underdrain system. If underlying existing site soils allow for a significant amount of infiltration (minimum 0.5 in/hr (120 min/in)), an underdrain pipe may not be needed. This type of BMP utilizes a combination of soils and plants to remove pollutants from storm water runoff through physical and biological processes. A typical landscape detention design includes a depressed ponding area, a topsoil or mulch layer, an engineered soil mix of peat or leaf compost and clean sand, and a gravel sub-base layer with an underdrain system consisting of a perforated pipe in a gravel layer. A vegetated buffer strip can be added to provide pretreatment. Storm water runoff from small events passes through slotted curb or curb cuts, which slows its velocity and distributes it evenly along the length of the ponding area. Water ponded to approximately 6 inches gradually infiltrates into the underdrain system, underlying soils or is evapotranspired over a period of days. The surrounding area should be graded to divert excess runoff from large events away from the landscape detention area towards the conventional storm drain system.

Applications and Advantages

Landscape detention may be used for commercial, residential, and industrial areas. It is well suited for street median strips, parking lot islands, and roadside swales. In addition to providing significant water quality benefits, landscape detention facilities can provide shade and wind breaks, absorb noise, improve an area's aesthetics, reduce irrigation needs, and reduce or eliminate the need for an underground storm drain system. Landscape detention areas may be integrated into a site's overall landscaping. Designers may use existing natural surface depressions and swales on the site.

Performance Data

The literature reported range of removal for various pollutants is as follows:

Pollutants	Percent Removal Efficiency
Total Suspended Solids	75 - 90
Total Phosphorus	70 - 80
Total Nitrogen	65 - 80
Total Zinc	75 - 80
Total Lead	75 - 80
Organics	75 - 90
Bacteria	75 - 90

Sources: CASQA, 2003; UDFCD, 1999.

Limitations

- Not suitable for locations where the seasonally high groundwater table is within 5 feet of the ground surface.
- Clogging may be a problem, especially in areas with high sediment loads in the runoff.
- Freezing may prevent infiltration of the runoff.
- If located in the vicinity of active construction sites, sediment controls and fencing should be installed to prevent clogging and compaction of engineered and existing site soils from heavy equipment.

Siting Criteria

- Drainage area should be less than 1 acre.
- May be located on-line or off-line of the primary drainage system.
- Not recommended for areas with slopes greater than 20 percent.
- Layout should be determined based on site constraints such as location of utilities, underlying soil conditions, existing vegetation, and drainage patterns.
- Not to be used in areas with infiltration rate of existing site soils is less than 0.5 in/hr (120 min/inch) and no adjacent storm drain system or other acceptable drainage feature is available for discharging underdrain system.

Design and Construction Criteria

- Use Design-aid Worksheet TC-30 (www.TMstormwater.com)
- Registered professional civil engineers and landscape architects should work together on the design landscape detention basins. Appropriate plant species can stabilize banks and increase the infiltration capacity and storm water treatment effectiveness of landscape detention basins.
- The locally available sand and gravel is typically washed with a high Ph, recycled wastewater. Sand and gravel **must** be rinsed with potable water prior to installation and construction of the sand filter.
- A typical landscape detention design includes a depressed ponding area, a topsoil or mulch layer, an engineered soil mix of peat or leaf compost and clean sand, and a gravel sub-base layer.
- Curb cuts can provide entrance into new and retrofitted landscape detention areas.
- A vegetated swale or buffer strip can be added to provide pretreatment.
- The size of the landscape detention area is a function of the drainage area and the runoff generated from the area. Recommended minimum dimensions of the landscape detention area are 15 ft wide by 40 ft long.
- Areas longer than 20 ft should be twice as long as they are wide.

- A permeable filter fabric separating the bioretention system from existing site soils and the engineered soil mix from the gravel sub-base should be installed.
- To allow infiltration and prevent clogging, the filter fabric should be a woven geotextile fabric layer such as SI Corporation Geotex 117F or an approved equivalent.
- An impermeable liner should be installed in areas where existing site soils are expansive clays or if there is outdoor storage or use of chemicals or materials within the drainage area that could threaten groundwater quality if a spill were to occur.
- An underdrain system consisting of a perforated pipe in a gravel layer is typically required where the infiltration rate of existing site soils is less than 0.5 in/hr (120 min/inch).
- The gravel layer should be Class C backfill, Section 200.03.04 of the Standard Specifications for Public Works Construction (SSPWC).
- If underlying existing site soils allow for a significant amount of infiltration (0.5 in/hr or more), an underdrain pipe may not be needed.
- Infiltration testing should be conducted at the location and bottom depth of the proposed bioretention system. A boring or test pit may be acceptable provided it is installed to a minimum depth of 5 ft below the bottom of the proposed bioretention system.
- Soils classified as type A or B may be suitable for infiltration of storm water and underdrain systems may not be necessary. (Refer to Appendix A of the *Truckee Meadows Low Impact Development Handbook* - NRCS Soil Survey Maps of the Truckee Meadows for a preliminary assessment of soil infiltration properties.)
- Infiltration testing may be required by the local jurisdiction to confirm infiltration rates at the site of a proposed bioretention system (refer to Section 2.3 in the *Truckee Meadows Low Impact Development Handbook*).
- Size the landscape detention area to capture and treat the Water Quality Volume (WQ_V) using the method outlined in Section 3.2.2.
- Flows in excess of the WQ_V should drain out of the landscape detention area and flow to another treatment control or the conventional storm drain system.
- Determine the ponding depth of the landscape detention area (D_{WQV}) based on the available surface area (SA) using the following equation:

$$D_{WQV} = (WQ_v / SA) \times 12$$

Where: D_{WQV} = ponding depth of the temporary ponded water (ft)

WQ_v = Water Quality Volume using the method outlined in Section 3.2.2 (ft^3)

SA = Surface area of ponding area based on the length and width at the toe of the sideslopes

- Maximum recommended ponding depth is 12 inches and minimum ponding depth is 6 inches with water standing no longer than 7 days. This prevents problems with mosquito breeding and certain plants that can't tolerate standing water.

- Planting soils should have infiltration rates greater than 0.5 in/hr (120 min/in).
- The recommended engineered soil mixture is 50-60 percent clean sand (ASTM 33), 20-30 percent peat or certified compost with a low P-index, and 20-30 percent topsoil.
- The maximum infiltration rate should not exceed 3.0 inches per hour.
- The pH of the soil should be between 5.5 and 6.5.
- Approximately 3 inches of shredded hardwood mulch should be applied to the area.
- Rule of thumb is 1 tree or shrub for each 50 ft^2 of landscape detention area.
- Plant selection and layout should consider aesthetics, maintenance, native versus non-native invasive species, and regional landscaping practices.
- Some trees should be planted on the perimeter to provide shade and shelter.

Inspection and Maintenance Requirements

- Upon installation, landscape detention basins should be inspected monthly and after large storm events.
- Inspections can be reduced to a semi-annual schedule once the landscape detention basin has proven to work efficiently and properly and vegetation is established.
- A health evaluation of trees and shrubs should be conducted biannually.
- Pruning and weeding as necessary.
- Mulch replacement generally required every two to three years.
- If ponding is observed for seven (7) consecutive days or longer from May through October (the local mosquito breeding season), cleaning of the underdrain system or replacement of engineered soils may be required.
- Key maintenance areas include inlet areas, under drain, and overflow structures.
- If a spill occurs and hazardous materials contaminate soils in landscape detention areas, the affected materials should be removed immediately and the appropriate soils and materials replaced as soon as possible.

References

California Stormwater Quality Association (CASQA), 2003. California Stormwater Best Management Practice Handbook, New Development and Redevelopment.

Idaho Department of Environmental Quality,2001. Catalog of Stormwater Best Management Practices for Idaho Cities and Counties. BMP #44 – Bioretention Basin http://www.deq.state.id.us/water/stormwater_catalog/doc_bmp44.asp

Maryland Department of the Environment (MDE), 2000. Maryland Stormwater Design Manual.

Prince George's County, Maryland. 2002. Bioretention Manual. http://www.goprincegeorgescounty.com/Government/AgencyIndex/DER/ESD/Bioretention/bioretention.asp

U.S. EPA Stormwater Technology Fact Sheet: Bioretention
http://www.epa.gov/owm/mtb/biortn.pdf

U.S. Department of Transportation, Federal Highway Administration, Stormwater Best Management Practices in an Ultra-Urban Setting: Selection and Monitoring, Fact Sheet – Bioretention. http://www.fhwa.dot.gov/environment/ultraurb/3fs3.htm

Urban Drainage and Flood Control District (UDFCD), 1999. Urban Storm Drainage Criteria Manual, Volume 3 – Best Management Practices. Denver, Colorado.

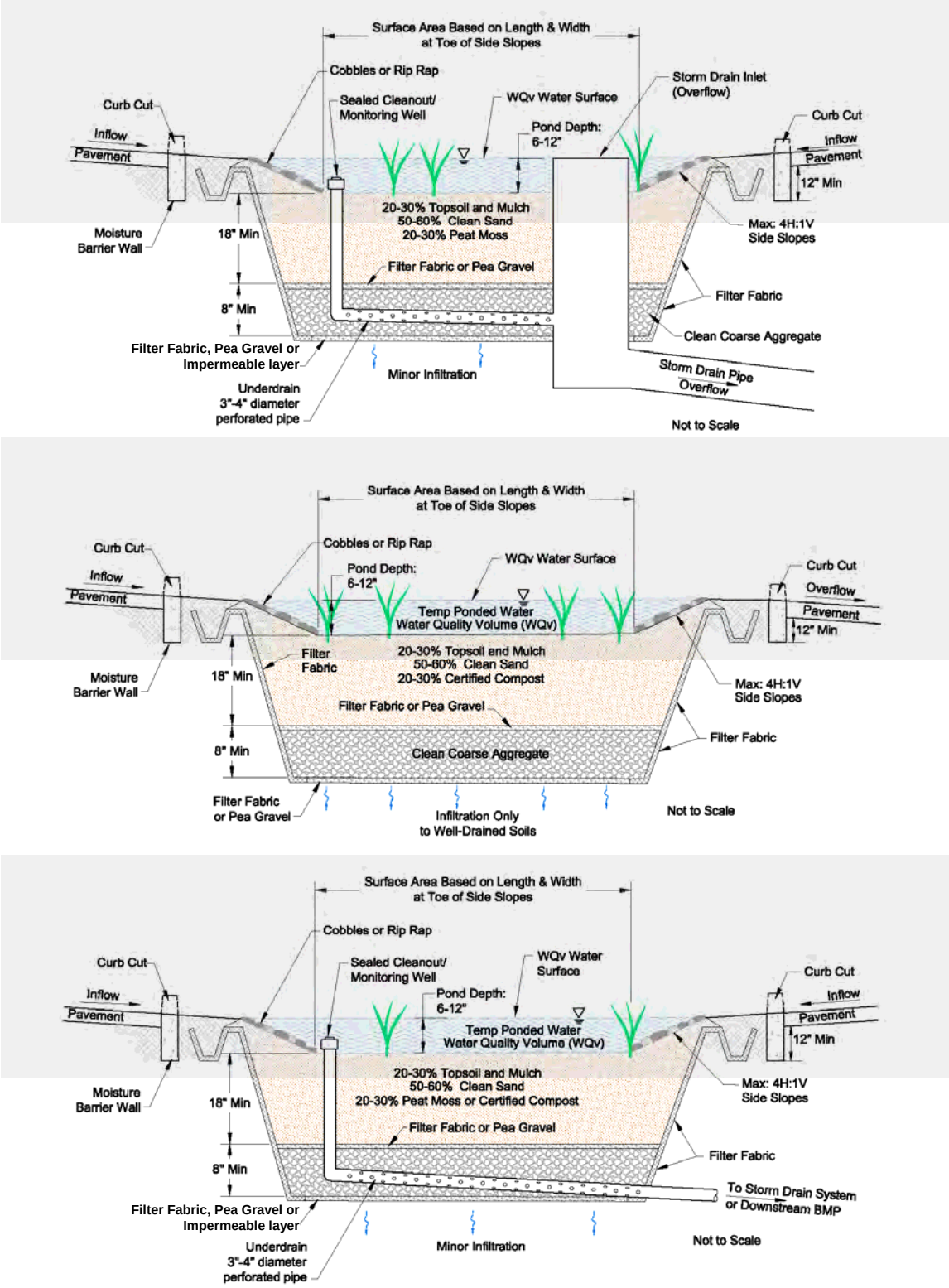

Figure TC-30. Schematics of a Landscape Detention facility

6.4 Sedimentation Basins

Sedimentation basins designed to detain the volume of storm water runoff produced by frequently occurring storm events (the water quality volume or WQ_V). They have outlet structures designed to detain the WQ_V for a longer period of time than is typical for flood control detention basins in order to allow fine-grained sediments and associated pollutants time to settle (e.g. 48 hours to 7 days). Storm water is slowly released by the outlet structure and pollutants are removed through settling and biochemical processes as the water stands in the basin. Infiltration into underlying soils can substantially improve pollutant removal effectiveness. Unlike wet ponds or constructed wetlands, these treatment controls do not have a permanent pool and water is not retained between storm events. Extended detention basins can also be used for flood control by including additional flood detention storage.

SEDIMENTATION BASINS TC-40

Description

Also known as extended detention basins or dry ponds, sedimentation basins allow for the collection and slow draining of frequently occurring runoff producing storm events. The outlet structure is specifically designed to detain the water quality volume for a minimum of 48 hours to allow fine-grained sediments and associated pollutants to settle. Between storm events, the basin is typically dry. Sedimentation basins are typically unlined and depending on the characteristics of the local soils, some infiltration also typically occurs, providing additional pollutant load reduction. Sedimentation basins not only improve water quality, but can also provide flood control by including additional flood detention storage. The outlet structure of sedimentation basins can be used to retrofit existing flood control detention facilities, providing a significant storm water quality treatment enhancement. This type of control measure requires a minimal amount of hydraulic head and has few siting constraints, making it one of the most flexible and applicable technologies for storm water treatment.

Applications and Advantages

Typically used as a regional method of improving urban runoff storm water quality from residential, commercial, and industrial areas. However, this treatment technology can also be used on a small scale as a pretreatment device for additional treatment controls.

Performance Data

The literature reported range of removal for various pollutants is as follows:

Pollutant	Influent	Effluent
Total Suspended Solids (mg/l)	87.7 (48.4-159)	41.4 (30.8-55.5)
Total Copper (ug/l)	32.3 (22.7-46)	18.9 (16.6-23.4)
Dissolved Copper (ug/l)	12.1 (8-18.3)	14.7 (11.4-20.9)
Total Lead (ug/l)	69.2 (33.6-143)	15.0 (9.2-23.8)
Dissolved Lead (ug/l)	3.4 (2-5.8)	2.33 (1.7-3.3)
Total Zinc (ug/l)	274 (178-422)	85.3 (50.6-143.7)
Dissolved Zinc (ug/l)	n/a	n/a
Total Phosphorus (mg/l)	0.4 (0.3-0.5)	0.3 (0.2-0.44)
Total Nitrogen (mg/l)	n/a	n/a
TKN (mg/l)	1.99 (1.6-2.5)	1.87 (1.46-2.39)

Source: UDFCD, 2005.

Pollutant removal efficiencies may be improved by adding a small, shallow permanent pool or wetland to the floor of the sedimentation basin.

Limitations

- Unless landscaped and properly maintained, sedimentation basins can detract from the value of surrounding homes.
- If the outlet is located next to a stream or a wetland, discharges from sedimentation basins can increase water temperatures downstream.
- Not effective in areas with clay soils.

Siting Criteria

- Do not place sediment basins adjacent to sensitive wetlands or perennial streams.
- Existing flood control detention basins can be retrofitted with sedimentation basin outlet structures.
- To be applied on sites with a minimum drainage area of 5 acres.
- Can be applied in areas underlain by all soil and rock types (except clayey soils).
- Sedimentation basins should not intersect the groundwater table.
- If part of a regional flood control facility, the area within a sedimentation basin that detains the water quality volume is not recommended for ballparks, picnic areas, or playing fields.

Design and Construction Criteria

- Use Design-aid Worksheet TC-40 (www.TMstormwater.com)
- Registered professional civil engineers and landscape architects should work together on the design sediment basins.
- Calculate the water quality volume (WQ_V) for the drainage area based on the method presented in Section 3.2.2.
- The basin should be designed to hold a volume equal to 120 percent of the WQ_V.
- The outflow structure should be designed to drain the water quality volume to be released within a minimum of 48 hours with no more than 50 percent draining within a 24-hour period.
- The maximum basin drain time is 7 days to prevent vector breeding.
- A trash rack should be provided and sized such that the hydraulic capacity of the outlet is not affected.
- The basin should have a minimum length to width ratio of 2:1 (3:1 is preferable).
- Optimal depth of sediment basins ranges from 2 – 5 feet.
- Side slopes within the sedimentation basin should be 4H:1V or flatter. Exterior side slopes should not be steeper than 3H:1V.

- Embankment soils should be compacted to 95 percent of their maximum density.
- If the structure is an in-line treatment control (e.g. no upstream diversion structure), an emergency spillway should be provided capable of safely passing up to and including the 100-year storm event.
- Vegetation can be installed on the bottom of the ponds, along banks and on the side slopes to provide stability.
- Stones or gabions may be used on the banks.
- An access and maintenance ramp must be provided.
- A forebay will aid in the settling out of particles by dissipating energy and collecting coarser grained sediments and debris.
- If outdoor storage of chemicals occurs within the drainage basin, an impermeable liner may be needed to prevent infiltration and groundwater contamination.
- Vegetation should be established immediately on the banks of the basin following installation.
- For perforated pipe outlet structures and structures with vertical plates and multiple orifices (Figures TC-40C and 40D) use the following equations to determine the required area per row of perforations:

$$A_O = WQ_V / K_{40}$$

Where: $K_{40} = 0.013D_{BS}^2 + 0.22D_{BS} - 0.10$

A_O= Total area of perforations per row (in^2)

WQ_V = Water Quality Volume (acre-ft)

D_{BS} = the depth of water above the centerline of the bottom row of perforations when the basin is retaining the WQ_V (ft)

- Select the appropriate perforation diameter and number of perforations per row (e.g. columns) with the objective of minimizing the number of columns and using a maximum perforation diameter of 2 inches.
- Rows should be spaced at 4 inches on center from the bottom perforation.
- Calculate the number of rows (nr) using the following equation:

$$nr = 1 + (12D_{BS}/3)$$

- Calculate the total orifice area by multiplying the area per row (A_O) by the number of rows (nr).
- A minimum ¼-inch steel screen should be placed over the outlet perforations to prevent debris from clogging the perforations. Stainless steel screen is recommended for long-term durability and performance.

Inspection and Maintenance Requirements

- Inspect after the first large storm event to ensure that the basin is draining as designed.
- Inspect before and after the rainy season for standing water, accumulation of sediments, debris and trash, presence of animal burrows, and the stability of surrounding slopes.
- Remove debris from screen covering perforations and overflow grate as needed.
- Vector control, vegetation maintenance, and debris removal comprise the majority of maintenance activities.
- When the volume of accumulated sediments exceeds 10 percent of the basin volume, the sediments should be removed and the area should be regraded.
- If a spill occurs and hazardous materials contaminate soils in a sedimentation basin, the affected areas should be removed immediately and the appropriate soils and materials replaced as soon as possible.

References

City and County of Sacramento, 2000. Guidance Manual for Onsite Stormwater Quality Control Measures, Sacramento Stormwater Management Program.

Maryland Department of the Environment (MDE), 2000. Maryland Stormwater Design Manual.

Sedimentation Basin, http://www.deq.state.mi.us/documents/deq-swq-nps-sb.pdf , Dec.1, 1992.

Urban Drainage and Flood Control District (UDFCD), 2005. Urban Storm Drainage Criteria Manual, Volume 3 – Best Management Practices. Denver, Colorado.

Ventura County, 2002. Technical Guidance Manual for Stormwater Quality Control Measures. Ventura Countywide Stormwater Quality Management Program.

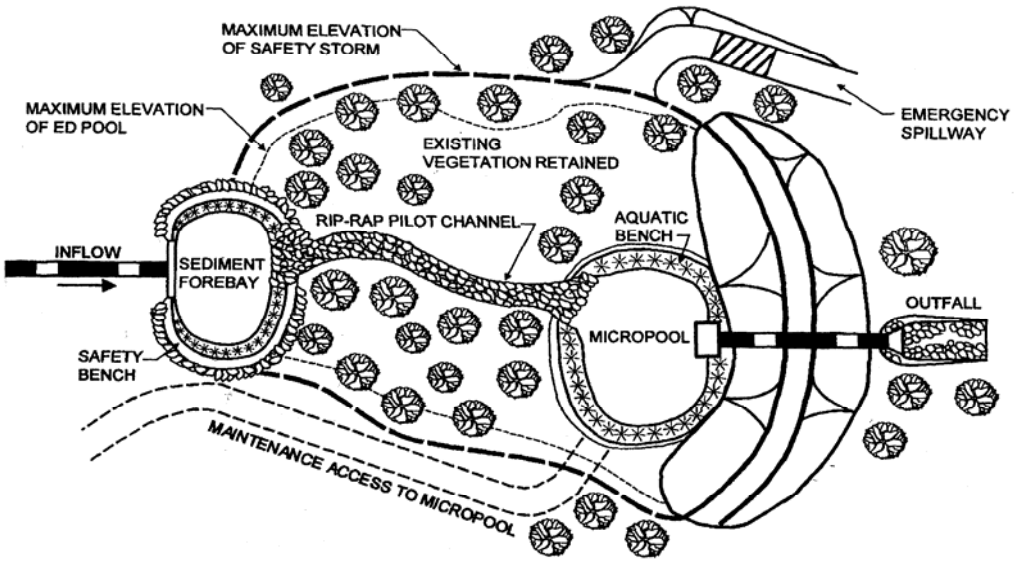

PLAN VIEW

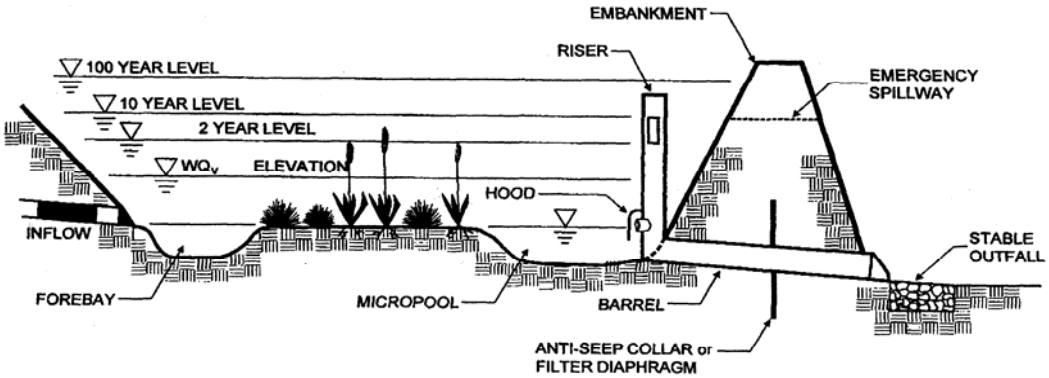

PROFILE

Figure TC-40A. Typical components of a Sedimentation Basin (modified from MDE, 2000).

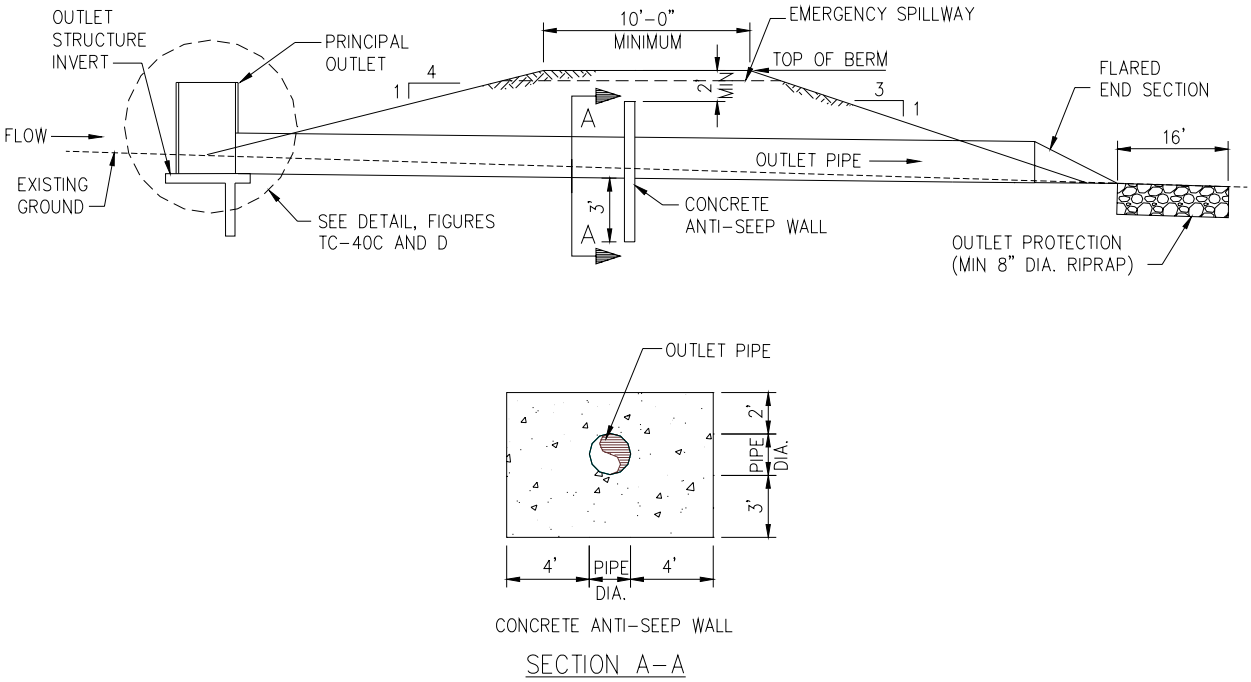

NOT TO SCALE

Figure TC-40B. Example design of a sedimentation basin embankment and outlet structure (Kennedy/Jenks, 2003).

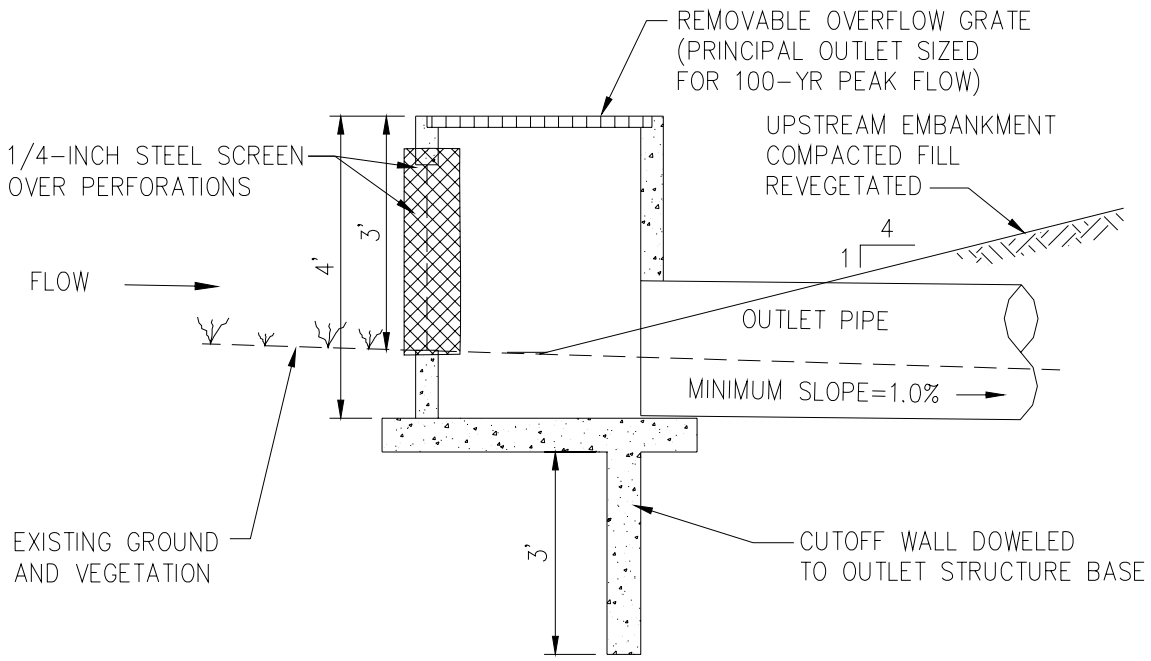

OUTLET STRUCTURE #1

NOT TO SCALE

Figure TC-40C. Example sedimentation basin outlet structure #1 – vertical plate with multiple orifices (Kennedy/Jenks, 2003).

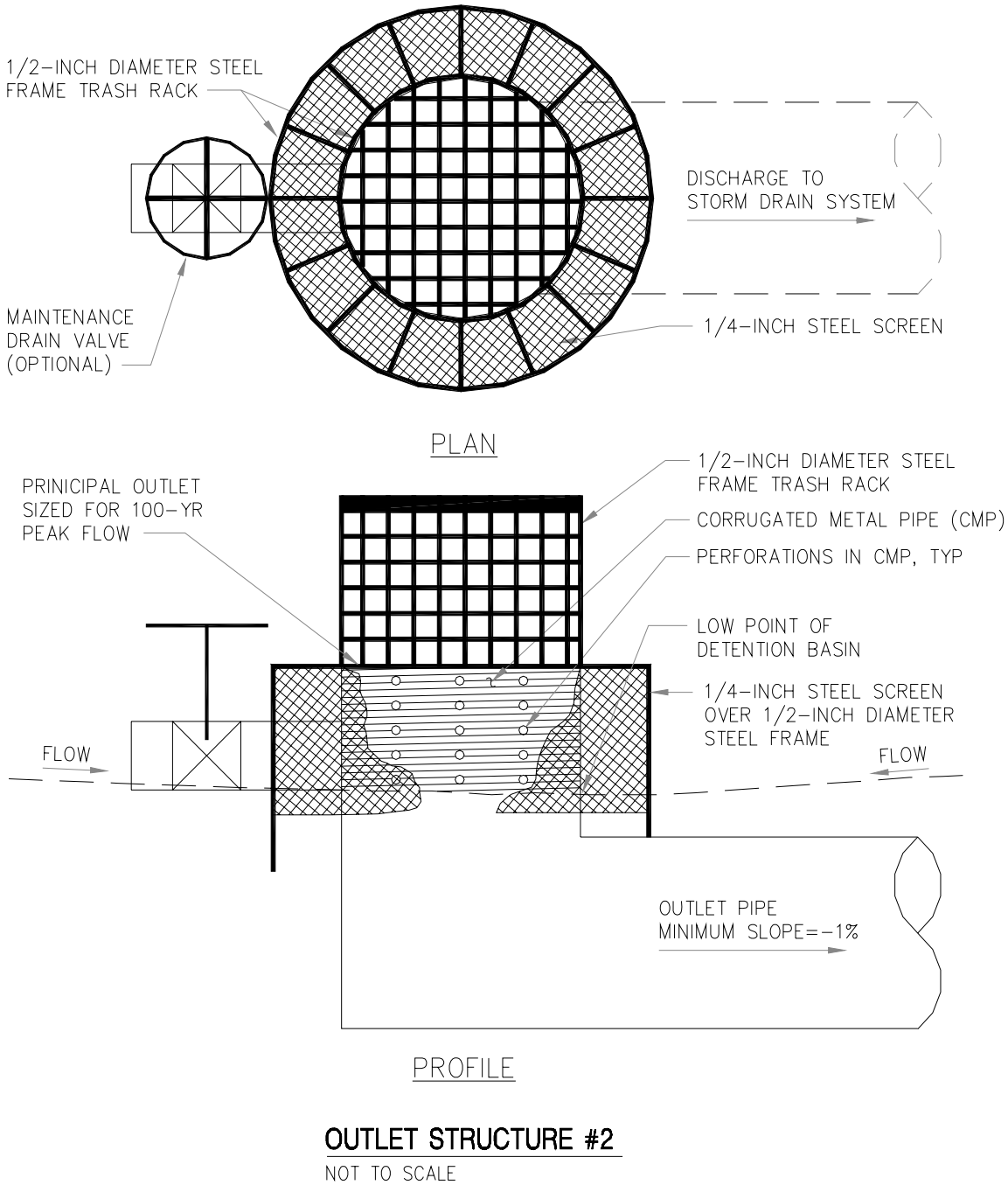

Figure TC-40D. Example sedimentation basin outlet structure #2 – perforated pipe (Kennedy/Jenks, 2003).

SAND FILTER BASINS TC-41

Description

A sand filter basin is a combination of a sedimentation basin and a sand filter. The water quality volume (WQ_V) collects in the basin and gradually infiltrates into an underlying sand bed with an under drain system. Fine grained sediments and associated pollutants are filtered out of the storm water and collected in the void spaces of the sand. The under drain system gradually dewaters the sand bed and filtered storm water then discharges into a vegetated swale, a channel or the storm drain system.

Applications and Advantages

Sand filter basins can be applied in urban areas with thin soils or soils with low infiltration rates. They are generally used as offline treatment devices with an upstream diversion that diverts the water quality volume into the basin and allows larger flows to bypass. They should be sited in drainage areas with relatively low sediment loads and no baseflow.

Performance Data

The literature reported range of removal for various pollutants is as follows:

Pollutant	Percent Removal Efficiency
Total suspended solids	80 - 90
Total Phosphorus	45 - 55
Total Nitrogen	35 – 55
Total Recoverable Zinc	50 – 80
Total Recoverable Lead	60 - 80
Biochemical Oxygen Demand	60 - 80

Source: UDFCD, 1999.

Limitations

- Potential of clogging exists if runoff contains high amounts of clays and silts.
- Sand filter basins should not be installed in new development until construction is complete and disturbed soils are stabilized.

Siting Criteria

- Sand filter basins should not be installed near building foundations or in areas containing expansive soils.
- Due to the horizontal design of this BMP, it may be difficult to install a sand filter basin on a steep slope.
- Not to be used in areas where there is a high water table.
- Should not be used in drainage areas that have a perennial base flow because a preferential flow path through the sand filter may occur as well as clogging of the filter media.

Design and Construction Criteria

- Use Design-aid Worksheet TC-41 (www.TMstormwater.com)
- Registered professional civil engineers should design sand filter basins.
- The locally available sand and gravel is typically washed with a high Ph, recycled wastewater. Sand and gravel **must** be rinsed with potable water prior to installation and construction of the sand filter.
- Size the basin to capture and treat the water quality volume (WQ_V) using the method outlined in Section 3.2.2.
- Flows in excess of the WQ_V should be diverted around or through the basin without resuspending collected sediments.
- The basin should be designed with a drain time of 48 hours.
- The maximum depth of the basin should be 3 feet.
- The minimum sand filter surface area (A_s in ft^2) at the base of the basin should be determined using the following equation:

$$A_s = WQ_V / 3 \text{ ft}$$

- The bottom of the sand filter basin should be lined with 18 inches of fine aggregate meeting the grading requirements of Section 200.05.04 Standard Specifications for Public Works Construction (SSPWC) overlying a 9-inch gravel layer of Class B backfill (Section 200.03.03 SSPWC).
- If chemicals are stored or handled within the catchment area, install an impermeable layer beneath the gravel layer.
- The following types of under drains can be applied: center collector pipe or a longitudinal pipe in a 9-inch gravel backfill containing a collector pipe at the outlet.
- Collector under drainpipes should have a minimum slope of 0.5 percent.
- The under drainpipes should have a minimum diameter of 6 inches and should be composed of perforated schedule 40 PVC.
- Basin side slopes should be 4H:1V or flatter.

Inspection and Maintenance Requirements

- Routinely remove debris and litter from the sand filter basin to minimize clogging and to maintain aesthetics.
- Replace vegetation and perform maintenance on the sand filter basin every 2 – 5 years by removing vegetation and the top 3 inches of the sand layer.
- Rake the top 3 – 5 inches of the filter surface a minimum of once a year.
- Inspect at least twice a year (with one inspection following a significant storm event) to ensure proper drainage and no ponding of water.
- If a spill occurs and hazardous materials contaminate the sand layer in a sand filter basin, the affected areas should be removed immediately and the appropriate soils and materials replaced as soon as possible.

References

Urban Drainage and Flood Control District (UDFCD), 1999. Urban Storm Drainage Criteria Manual, Volume 3 – Best Management Practices. Denver, Colorado.

Urban Drainage and Flood Control District (UDFCD), 2005. Urban Storm Drainage Criteria Manual, Volume 3 – Best Management Practices. Denver, Colorado.

Surface Sand Filters, Metropolitan Council/Barr Engineering Co., http://www.metrocouncil.org/environment/Watershed/bmp/CH3_STFiltSurfSand.pdf

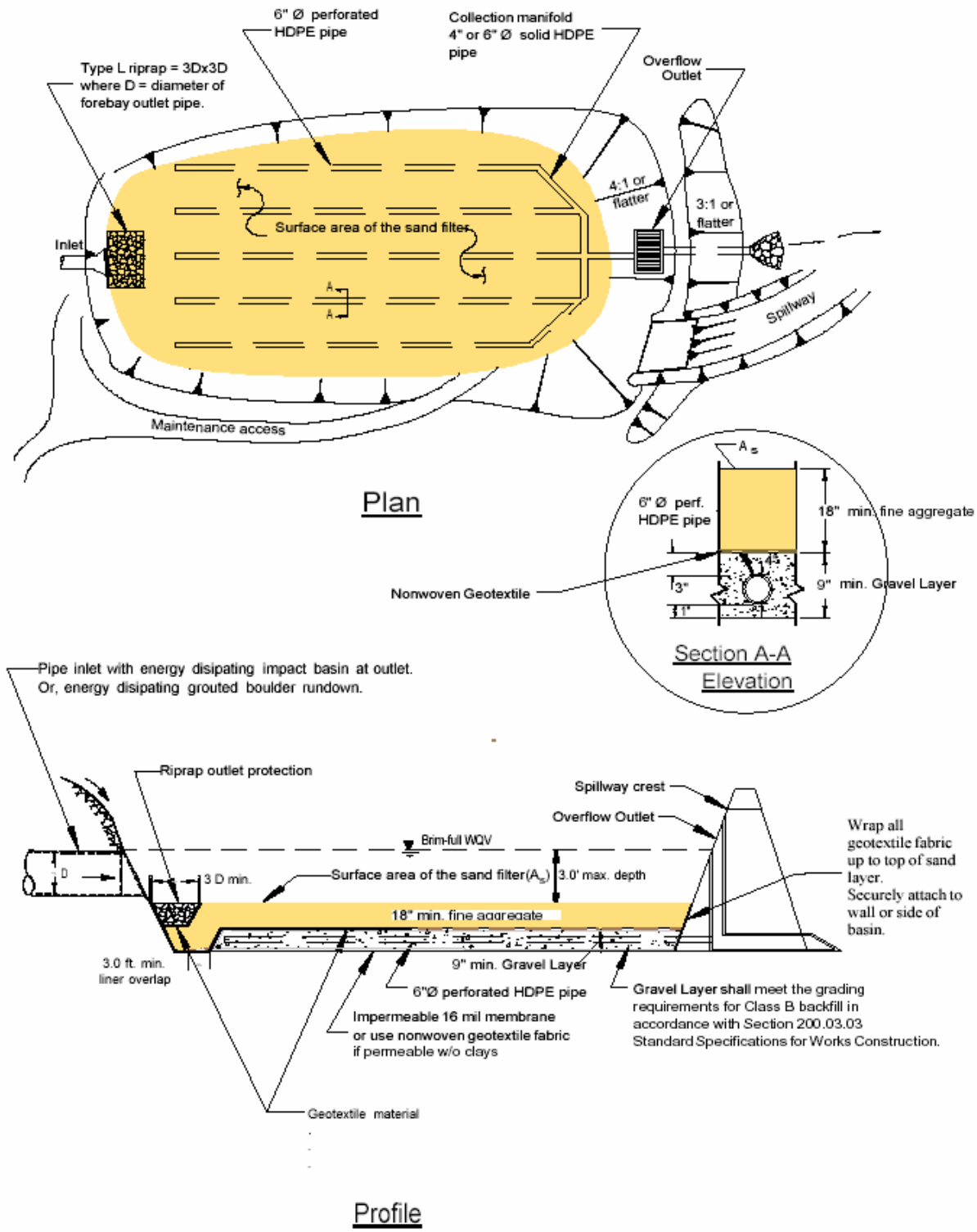

Figure TC-41. Example of a Sand Filter Basin design (modified from UDFCD, 2005).

6.5 Storm Water Ponds and Wetlands

Storm water ponds and wetlands are constructed basins that have a permanent pool of water at least throughout the wet season. Storm water ponds are typically deeper and have less micro topography and wetland vegetation than storm water wetlands. In arid locations such as the Truckee Meadows, they require a dependable source of water to sustain the wetland vegetation. These treatment controls are among the most effective in terms of pollutant removal and can also offer aesthetic value. Storm water pollutant removal is achieved through settling and biological uptake within the pond or wetlands.

Description

Storm water ponds are also known as wet ponds, sediment retention ponds, or wet extended detention ponds. They are typically deeper, have more open water and contain less wetland vegetation than storm water wetlands. Storm water ponds contain a permanent pool of water and the excess capacity of the structure is used to collect and treat the water quality volume. Between storm events, pollutants are removed from the water through sedimentation, biological processes and chemical processes. Given proper design and maintenance, these ponds provide valuable wetland habitat, increase the aesthetic value of the area, and improve water quality.

Applications and Advantages

Can be applied over a range of storm sizes, storm frequencies, and drainage areas. However, they are limited in application in urban settings and arid climates because they require a perennial water source. Storm water ponds can be installed either on-line or off-line.

Performance Data

The literature reported range of removal for various pollutants is as follows:

Pollutant	Influent	Effluent
Total Suspended Solids (mg/l)	88.8 (48.9-156)	19.7 (16.6-23.4)
Total Copper (ug/l)	18.0 (7.4-43)	6.92 (4.7-10.3)
Dissolved Copper (ug/l)	8.87 (5.4-14.6)	5.09 (3.1-8.3)
Total Lead (ug/l)	33.3 (10.2-109)	6.68 (2.9-15.6)
Dissolved Lead (ug/l)	9.48 (0.9-101.4)	4.16 (2.0-8.9)
Total Zinc (ug/l)	75.3 (44-128.9)	28.6 (21.4-38.3)
Dissolved Zinc (ug/l)	57.4 (20.1-163)	16.9 (2.6-109)
Total Phosphorus (mg/l)	0.53 (0.3-0.9)	0.16 (0.12-0.21)
Total Nitrogen (mg/l)	1.49 (0.6-3.6)	1.17 (0.77-1.78)
TKN (mg/l)	1.06 (0.8-1.4)	0.84 (0.68-1.04)

Source: UDFCD, 2005.

Limitations

- Unless a perennial baseflow is available to support a permanent pool, this technology is typically not practical in arid climates.
- May create a public health hazard and require fencing.
- Can create mosquito-breeding habitat.
- Increased water temperatures within the pond may lead to warming downstream.
- If not regularly maintained, permits may be required to perform necessary maintenance.
- May provide a habitat for waterfowl that may lead to increased nutrient loads.

Siting Criteria

- Apply in areas with high volumes of suspended sediments and dissolved contaminants.
- Areas having fairly consistent year-round base flow.
- Applicable to drainage areas greater than 25 acres.
- Must be sited in an area with available open space.
- Not to be located on steep unstable slopes.

Design and Construction Criteria

- Use Design-aid Worksheet TC-50 (www.TMstormwater.com)
- Registered professional civil engineers and landscape architects should work together on the design of storm water ponds.
- Storm water ponds should be sized to contain the permanent pool plus the Water Quality Volume (WQ_V).
- The WQ_V should be determined using the method outlined in Section 3.2.2.
- The permanent pool volume should be equal to twice the water quality volume.
- A sediment forebay can be installed to aid in the settling of coarse sediments.
- The forebay should be a minimum of 3 feet deep and should hold 15 to 25 percent of the permanent pool volume.
- An impermeable liner may be needed if the pond is located in an area with porous soils.
- Water depth in the pond should not exceed 8 feet and should range between 4 and 6 feet.
- The minimum length to width ratio of the pond should be 1.5:1.
- The basin should be narrow at the inlet and wide at the outlet.
- Ponds having a depth greater than 4 feet should have an aquatic bench extending around their perimeter. The aquatic bench should be 5 to10 feet wide and less than 18 inches deep.

- Side slopes above the permanent pool should be 4H:1V or flatter and should be stabilized with vegetation on slopes as long as it is kept 2 feet from the waters edge.
- Littoral zone side slopes should be 40H:1V or flatter.
- Wetland vegetation should not cover more than 25 percent of the ponds surface and should be maintained as isolated islands away from the pond's perimeter edge.
- The emergency spillway should be consistent with local flood control design standards (100 year peak flow, probable maximum flood (PMF), or standard project flood (SPF)).
- The outlet structure should be designed to drain the WQ_V within a minimum of 48 hours.
- Where permissible with local fish and game officials, stock pond with mosquito fish (Gambusia sp.) to aid in controlling mosquito populations.
- A pretreatment device, such as a hydrodynamic separator can be used to remove litter and debris before being discharged to the pond for further treatment.
- The design of these ponds should include a meandering low-flow channel connecting all micro pools or place aerator(s) in these ponds with a two hour operation in the morning and evening.
- Vegetation can be installed on the bottom of the pond excluding 2 feet on both sides of the low-flow channel.

Inspection and Maintenance Requirements

- Biannual performance and maintenance inspections should be conducted.
- Cut and remove wetland plants every 5 - 15 years to remove nutrients and metals retained in the vegetation.
- Sediments may need to be removed from the pond every 5 – 20 years.
- To maintain an attractive pond, litter and debris must be regularly removed.
- A non-clogging outlet such as the reverse-slope pipe or a weir outlet with a trash rack should be installed in the pond.
- Properly maintain the access road as well as the shoreline vegetation.

References

California Stormwater Quality Association (CASQA), 2003. California Stormwater Best Management Practice Handbook, New Development and Redevelopment.

City and County of Sacramento, 2000. Guidance Manual for On-site Stormwater Quality Control Measures, Sacramento Stormwater Management Program.

Urban Drainage and Flood Control District (UDFCD), 1999. Urban Storm Drainage Criteria Manual, Volume 3 – Best Management Practices. Denver, Colorado.

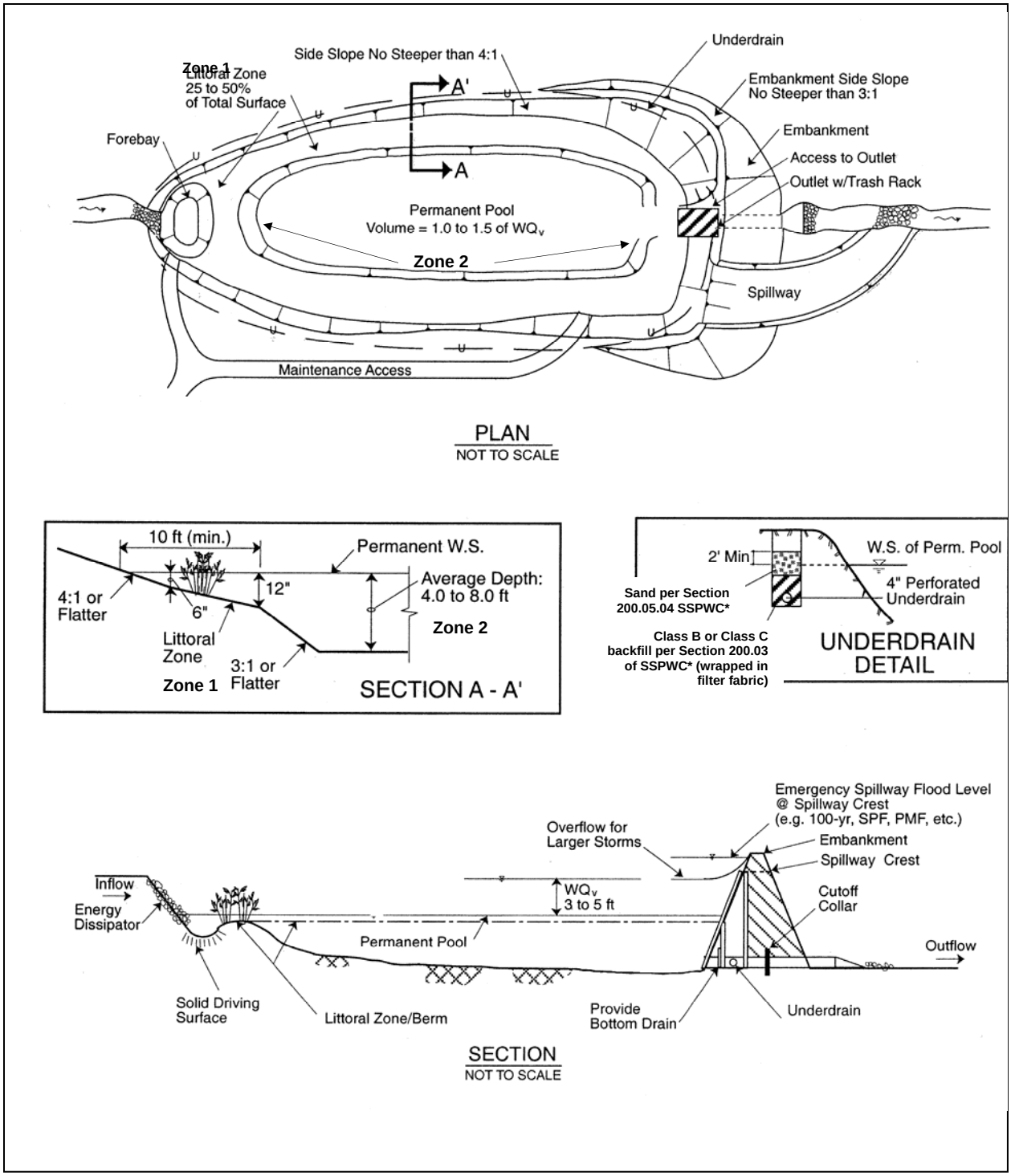

* SSPWC: Standard Specifications for Public Works Construction

Figure TC-50. Example of a Storm Water Pond (modified from UDFCD, 1999).

STORM WATER WETLANDS TC-51

Description

Storm water wetlands or constructed wetlands are shallow ponds that have a perennial base flow that supports the growth of rushes, willows, cattails, reeds and other wetland vegetation. They differ from storm water ponds by having relatively large shallow areas with complex microtopography that supports a greater and larger variety of wetland vegetation. The purpose of storm water wetlands is to slow the flow of water and allow sediments to settle out of suspension as well as the biological uptake of nutrients by the vegetation. Nutrient and pollution removal efficiencies are dependent upon the design of the wetland, the concentration of pollutants in runoff, local hydrology, climate conditions, soils and diligence of maintenance activities. Storm water wetlands are artificial structures, although sections of "natural" wetlands along ephemeral streams may be incorporated following federal and state regulations.

Application

Can be applied to treat storm water runoff from large tributary catchment areas, provided a perennial base flow is available to sustain wetland vegetation.

Performance Data

The literature reported range of removal for various pollutants is as follows:

Pollutant	Influent	Effluent
Total Suspended Solids (mg/l)	82.1 (65.7-103)	19.7 (16.6-23.4)
Total Copper (ug/l)	n/a	n/a
Dissolved Copper (ug/l)	n/a	n/a
Total Lead (ug/l)	12.6 (3.8-42)	3.25 (1.9-5.6)
Dissolved Lead (ug/l)	n/a	n/a
Total Zinc (ug/l)	164 (54.6-494)	1119 (32.8-429)
Dissolved Zinc (ug/l)	n/a	n/a
Total Phosphorus (mg/l)	2.91 (1.9-4.6)	0.15 (0.07-0.33)
Total Nitrogen (mg/l)	2.56 (1.6-4)	2.42 (1.46-4.0)
TKN (mg/l)	1.23 (1-1.6)	1.33 (0.84-2.11)

Source: UDFCD, 2005.

Limitations

- A perennial base flow is needed to maintain water levels and vegetation.
- Periodic maintenance and/or removal of wetland sediments and vegetation are required.
- Can provide a mosquito-breeding habitat.
- Requires a relatively large area.

Siting Criteria

- Apply in areas where runoff contains relatively high volumes of suspended sediments and dissolved contaminants.
- Must site in drainage areas with perennial base flow.
- Site should be underlain by loamy soils to allow for plants to take root.
- Not to be located on steep unstable slopes.
- It is preferable to site the wetland and design for inflow offline from other high flow or flood flow conveyance.

Design and Construction Criteria

- Use Design-aid Worksheet TC-51 (www.TMstormwater.com)
- Registered professional civil engineers and landscape architects should work together on the design storm water wetlands.
- Sized to contain a permanent pool with wetland vegetation plus the Water Quality Volume (WQ_V).
- The WQ_V should be determined using the method outlined in Section 3.2.2.
- The permanent pool volume should be twice as large as the WQ_V.
- A sediment forebay can be installed to aid in the settling of coarse sediments. The forebay should be a minimum of 3 feet deep and should hold 15 to 25 percent of the permanent pool volume.
- An impermeable liner may be needed if the pond is located in an area with porous soils.
- A minimum length to width ratio of 1.5:1 should be applied.
- The basins should be narrow at the inlet and wide at the outlet.
- Maximum water depth is 4 feet in open water areas.
- The outlet of the wetland should allow for drainage of the water quality volume within a minimum of 48 hours.
- A maintenance access ramp must be provided for cleaning of forebay and wetland.
- Side slopes should be 4H:1V or flatter and should be stabilized with vegetation slopes as long as it is kept 2 feet from the waters edge.

- Wetland vegetation should not cover more than 50 percent of the ponds surface area and vegetation should be maintained as isolated islands away from the pond's perimeter edge.
- The design of this structure should include a meandering low-flow channel connecting the inlet to the outlet pipe or place aerator(s) operating for a two hour period in the morning and evening.
- Use the methods outlined in TC-40 (Sedimentation Basins) for sizing perforated pipe outlet structures and structures with vertical plates and multiple orifices with the bottom row of perforations located at the top of the permanent pool.

Inspection and Maintenance Requirements

- Where permissible with local fish and game agencies, stock pond with mosquito fish (Gambusia sp.) to aid in controlling mosquitoes.
- Wetlands should be inspected semi-annually for structural integrity, sediment accumulation, and burrows.
- Cut and remove wetland plants annually to remove nutrients.
- Sediments may need to be removed from the forebay every five years.
- Remove litter and debris from the wetland pond before the onset of the storm season.

References

California Stormwater Quality Association (CASQA), 2003. California Stormwater Best Management Practice Handbook, New Development and Redevelopment.

City and County of Sacramento, 2000. Guidance Manual for Onsite Stormwater Quality Control Measures, Sacramento Stormwater Management Program.

Maryland Department of the Environment (MDE), 2000. Maryland Stormwater Design Manual.

Urban Drainage and Flood Control District (UDFCD), 2005. Urban Storm Drainage Criteria Manual, Volume 3 – Best Management Practices. Denver, Colorado.

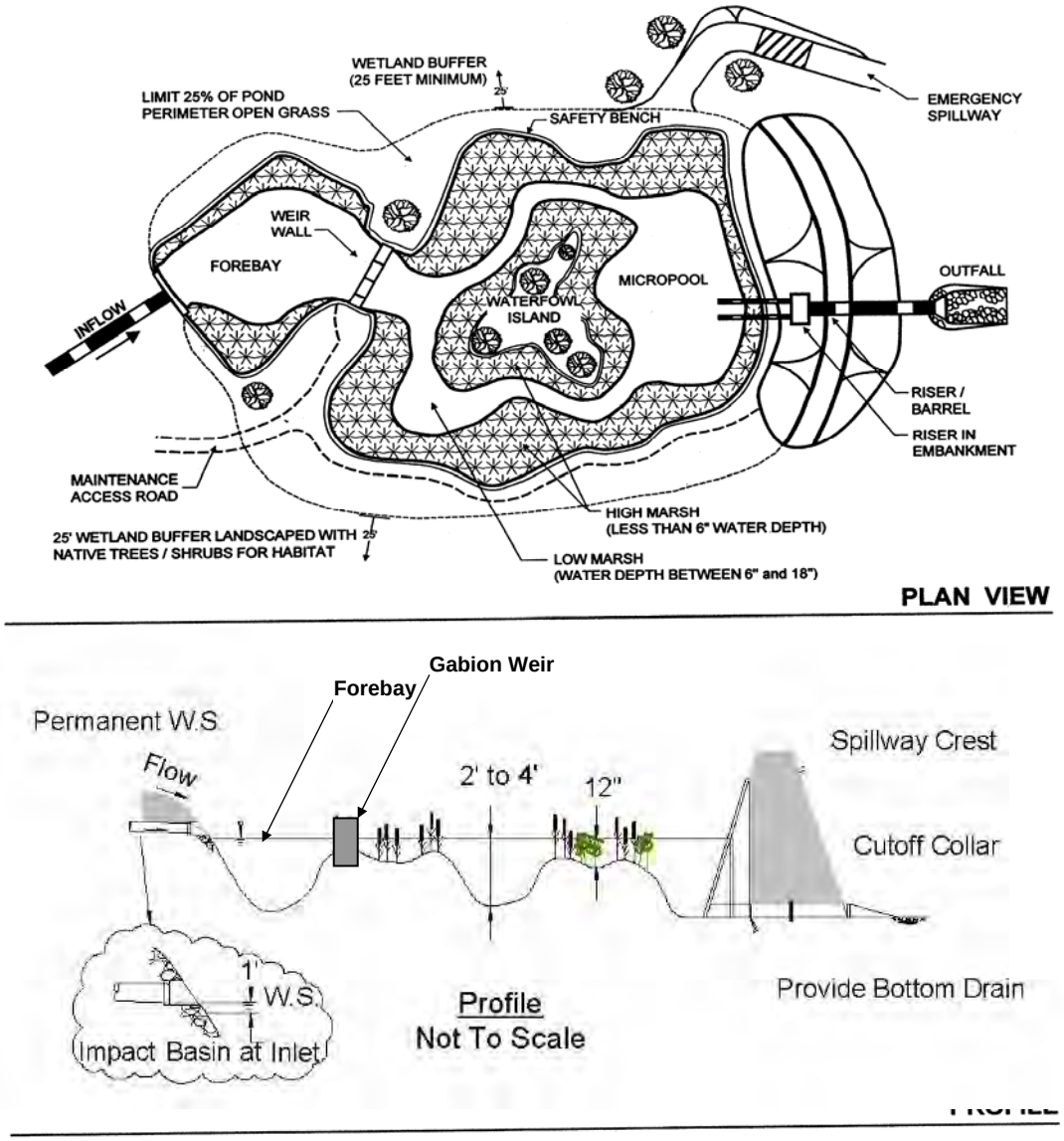

Figure TC-51. Example design of a Storm Water Wetland (from MDE, 2000; CASQA, 2003)

6.6 Media Filtration Systems

These treatment control devices typically consist of two chambers, a pretreatment settling basin and a filter bed filled with sand or some other absorptive filtering media. Large particles transported in storm water runoff settle in the pretreatment basin while finer particles and associated pollutants are removed by filtering through the media in the second chamber. There are a number of design variations including the surface or Austin sand filter and the underground, DC or Delaware sand filter. When used with a sand filter bed, porous pavement can also be considered a media filtration system.

SURFACE SAND FILTERS TC-60

Description

Surface sand filters, also known as Austin sand filters, are a type of media filter that applies a combination of sedimentation, filtration, and adsorption to remove sediment and associated pollutants. The surface sand filter is constructed of an upstream bypass structure (e.g. a weir), a sedimentation chamber, a flow distribution cell, and a sand filter bed. The purpose of the sedimentation chamber is to remove floatables and heavier suspended sediments. The sand filter bed removes lighter suspended sediments and additional contaminants. This BMP is widely used across the country. Site design configurations can vary significantly depending on local conditions and site constraints.

Applications and Advantages

Applied to drainage areas ranging between 0.5 and 50 acres and containing both pervious and impervious surfaces. Surface sand filters are commonly applied at transportation facilities, large parking areas, and around commercial developments. They can also be applied in highly developed areas, on sites with steep slopes, and to retrofit existing sites. However, sand filters should not be applied where high sediment loads are expected unless a pretreatment device is to be applied.

Performance Data

The literature reported range of removal for various pollutants is as follows:

Pollutant	Percent Removal Efficiency
Total Suspended Solids	80 - 90
Total Phosphorus	45 - 55
Total Nitrogen	35 - 55
Total Zinc	50 - 80
Total Lead	60 - 80
BOD	60 - 80

Source: UDFCD, 1999.

Limitations

- Can frequently become clogged in areas with highly erodible or unstable soils.
- Clogging of the sand media in surface sand filters installed along roadways commonly occurs 2 – 10 years after installation if not maintained.
- Can only be used in areas where sufficient vertical relief in the land topography is available to allow the system to drain by gravity.

Siting Criteria

- Sufficient vertical relief in land topography is required to allow the system to drain by gravity.
- Relatively large drainage areas require large surface sand filters. Therefore a significant amount of available open space may be required.
- A minimum distance of 3 feet should exist between the high seasonal water table and the bottom of the filter bed.
- Do not install in areas with highly erodible or unstable soils.

Design and Construction Criteria

- Use Design-aid Worksheet TC-60 (www.TMstormwater.com)
- Registered professional civil engineers should design surface sand filters.
- The locally available sand and gravel is typically washed with a high Ph, recycled wastewater. Sand and gravel **must** be rinsed with potable water prior to installation and construction of the sand filter.
- In areas where large sediments loads in runoff are present, a pre-treatment BMP should be installed upstream of the surface sand filter.
- In areas of shallow groundwater, a liner may need to be installed below the sand filter to prevent potential groundwater contamination.
- Do not use as a sediment basin during construction.
- An upstream diversion structure should be used. The diversion structure must effectively isolate the water quality volume (WQ_V) and convey flows greater than the WQ_V past the basin.
- The sedimentation basin should be sized to capture and detain the WQ_V plus a minimum freeboard of 0.5 ft.
- The WQ_V sizing method is described in Section 3.2.2
- Minimum depth of the sedimentation basin (d_f) is 3 feet.
- The sedimentation basin length to width ratio should be a minimum of 2:1.
- The sedimentation basin should not drain in less than 24 hours.
- The minimum surface area of the sedimentation basin (A_S) should be determined using the following equation:

$$A_S = WQ_V / d_f$$

Where: A_S = Surface area of the sedimentation basin in ft^2

WQ_V = Water Quality Volume in ft^3

d_f = Sediment basin depth in feet

- The sedimentation basin design criteria are summarized in Table TC-60A.

- A trash rack should be provided around the outlet structure from the sedimentation basin. Openings in the trash rack should not exceed 1/3 the diameter of the vertical riser pipe. The trash rack should be made of a durable rust resistant material. A cone of 1 to 3-inch gravel should be placed around the base of the riser pipe to prevent clogging of the bottom perforations.

Table TC-60A: Sedimentation Basin Design Criteria

Parameter	Design Criteria
Maximum drainage area	50 acres
Minimum sedimentation basin depth, d_f	3 ft
Minimum allowable surface area, A_S	WQ_V /10
Minimum length to width ratio	2:1
Maximum WQ_V drawdown time	24 hrs
Minimum freeboard	0.5 ft above WQ_V water level
Minimum basin volume	WQ_V + 1 ft freeboard
Maximum inlet entrance velocity	3 fps

- The primary design parameter of the sand filter basin is the surface area, which is a function of the sand permeability, the sand bed depth, the hydraulic head and the expected sediment loading.
- The required sand filter basin surface area (A_f) can be determined using the following equation, and the design criteria provided in Table TC-60B:

$$A_f = (WQ_V)(d_f)/k(h + d_f)t_f$$

Where: A_f = surface area of the filter basin in ft^2

WQ_V = Water Quality Volume in ft^3

d_f = sand bed depth in feet

k = coefficient of permeability for the sand filter in ft/hr (typically 1.18 ft/hr for clean, well graded sand with d_{10}=0.1 mm)

h = one half of the maximum allowable water depth (2h) over the filter bed in ft

t_f = time required for the WQ_V to pass through the filter in hrs

- A gravel layer and under drain system should be placed below the sand filter layer.
- A woven geotextile fabric layer such as SI Corporation Geotex 117F or equal should be installed between the sand filter and the gravel under drain.
- Additional design criteria for the sand filter basin are summarized in Table TC-60B.

Table TC-60B: Sand Filter Basin Design Criteria

Parameter	Design Criteria
Minimum sand depth, d_f	18 in
Filter sand size	concrete sand per Sec. 200.05.04 SSPWC*
Minimum under drain gravel bed depth	16 in
Under drain gravel size	Size No. 357 coarse aggregate per Sec. 200.05.04 SSPWC*
Minimum water depth over sand filter, h	3 ft
Minimum gravel depth under sand filter	2 in
Minimum filtration rate of sand filter, k	3.5 ft/day
Slope of sand filter surface	0 (horizontal)
Minimum gravel cover over under drain pipes	2 in
Minimum under drain pipe size and type	6 in Schedule 40 PVC
Minimum under drain pipe slope	1 percent
Minimum under drain perforation size, diameter	3/8 in
Minimum number of perforation holes per row	6
Maximum spacing between rows of holes	6 in
Maximum WQ_V drawdown time, t_f	40 hrs

***** SSPWC: Standard Specifications for Public Works Construction

Inspection and Maintenance Requirements

- Inspect the system at least 3 times a year, once at the beginning of the rainy season and after major storm events to remove litter and debris and to keep the filter from clogging.
- Access must be provided for maintenance and repairs.
- Excess plant growth within the filter is not recommended.
- Rake the top 3 – 5 inches of sand once per year or when drainage begins to slow or pond. Remove sediments when accumulation exceeds 0.5 inches.
- If sand filter does not drain within 40 hours, maintenance is required.
- Every 2 – 5 years the vegetative cover should be removed for maintenance of the sand filter.
- Sand and gravel filter media may need to be replaced every 3 to 5 years.

References

California Stormwater Quality Association (CASQA), 2003. California Stormwater Best Management Practice Handbook, New Development and Redevelopment.

City of Austin, 2003. Environmental Criteria Manual.

City and County of Sacramento, 2000. Guidance Manual for Onsite Stormwater Quality Control Measures, Sacramento Stormwater Management Program.

Idaho Department of Environmental Quality, 2001. Catalog of Stormwater Best Management Practices: For Idaho Cities and Counties. BMP #40 – Sand Filter. http://www.deq.state.id.us/water/permits_forms/permitting/catalog_bmps.cfm

Stormwater Technology Fact Sheet, Sand Filters, U.S. Environmental Protection Agency, http://www.epa.gov/owm/mtb/sandfltr.pdf

Stormwater Management Fact Sheet: Sand and Organic Filter, The Stormwater Manager's Resource Center, http://www.stormwatercenter.net/

Urban Drainage and Flood Control District (UDFCD), 1999. Urban Storm Drainage Criteria Manual, Volume 3 – Best Management Practices. Denver, Colorado.

U.S. Department of Transportation, Federal Highway Administration, Stormwater Best Management Practices in an Ultra-Urban Setting: Selection and Monitoring, Fact Sheet – Surface Sand Filters, http://www.fhwa.dot.gov/environment/ultraurb/3fs8.htm

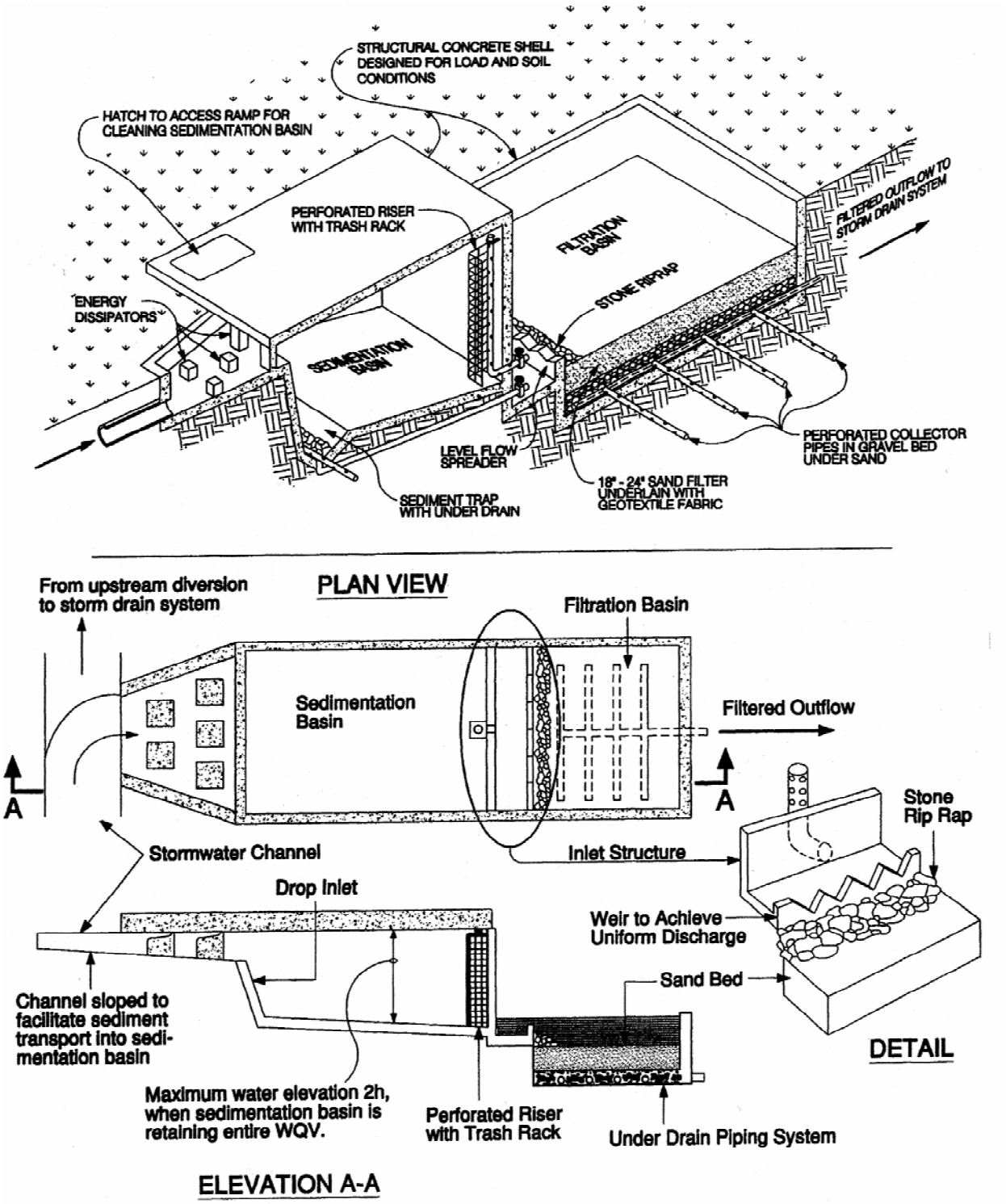

Figure TC-60. Conceptual Surface Sand Filter design (modified from Austin, 2003).

UNDERGROUND SAND FILTER TC-61

Description

Also known as the D.C or a Delaware sand filter, the underground sand filter is composed of three main chambers and is located underground. The underground sand filter is constructed of a bypass chamber, a sedimentation chamber, a flow distribution cell, and a sand filter bed. The purpose of the sedimentation chamber is to remove floatables and heavy sediments. The sand filter bed removes suspended sediments and associated pollutants such as fecal coliform bacteria, trace metals, and oil and grease from the storm water runoff.

Applications and Advantages

Generally applicable for treating runoff from drainage areas containing a significant percentage of impervious area such as roadways, parking lots, commercial and industrial areas. Underground installation allows for placement under parking lots, sidewalks, and close to buildings. These filters are well adapted for locations with limited land area. Because the filter is located below grade, vandalism is not a concern and climate does not have a large impact on effectiveness.

Performance Data

The literature reported range of removal for various pollutants is as follows:

Pollutant	Percent Removal Efficiency
Total Suspended Solids	80 - 90
Total Phosphorus	45 - 55
Total Nitrogen	35 – 55
Oil and Grease	70 - 80
Total Recoverable Zinc	50 – 80
Total Recoverable Lead	60 - 80
Biochemical Oxygen Demand	60 - 80
Fecal Coliform Bacteria	40 - 80

Sources: UDFCD, 1999; FHWA, 2003.

Limitations

- Standing waters in the sediment chamber may provide mosquito habitat if access through manhole covers or other points of entry is available. Prevent vector entrance by covering the manhole covers and other points of entry.

Siting Criteria

- The D.C. type underground sand filter can be placed under roadways, parking lots, sidewalks or landscaped areas and can treat drainage areas of up to 1.5 acres.
- The Delaware type underground sand filter is typically placed along the perimeter of parking lots and can treat drainage areas of up to 5 acres.
- Issues of buoyancy must be considered in areas with high groundwater tables.
- Do not install in drainage areas with highly erodible or unstable soils.

Design and Construction Criteria

The following design criteria apply to both D.C. and Delaware type underground sand filters.

- Registered professional civil engineers should design underground sand filters.
- The locally available sand and gravel is typically washed with a high Ph, recycled wastewater. Sand and gravel **must** be rinsed with potable water prior to installation and construction of the sand filter.
- Design the structure to detain the water quality volume (WQ_V) based on the method presented in Section 3.2.2.
- Flows in excess of the WQ_V should be diverted around the underground sand filter with an upstream diversion structure.
- Determine the maximum allowable depth of water in the underground sand filter (h_{max}) by considering the difference between the inlet and outlet invert elevations.
- The sand filter layer should consist of a minimum 16-inch gravel bed (d_g) covered with a minimum 18-inch sand filter layer (d_s) and a minimum 2-inch gravel layer above the sand filter layer. Geotextile fabric liners should be placed between the sand and gravel layers (e.g. above and below the sand layer).
- A woven geotextile fabric layer such as SI Corporation Geotex 117F or equal should be installed between the sand filter and the gravel under drain.
- The top of the sand and gravel filter should not have any slope or grade.

For D.C. type underground sand filters, use Design-aid Worksheet TC-61(a) at www.TMstormwater.com and apply the following equations and the design criteria summarized in Table TC-61A.

- The required sand filter basin surface area (Af) can be determined using the following equation:

$$A_f = (WQ_V)(d_f)/k(h + d_f)t_f$$

Where: A_f = surface area of the filter basin in ft^2

WQ_V = Water Quality Volume in ft^3

d_f = filter depth in ft ($d_f = d_g + d_s$)

k = coefficient of permeability for the sand filter (typically 1.18 ft/hr for clean, well graded sand with d_{10}=0.1 mm)

h = one half of the maximum allowable water depth (2h) over the filter bed in feet, 2h = (h_{max} – d_f)

t_f = time required for the WQ_V to pass through the filter in hrs (max = 48 hrs)

- Considering site constraints, assume a filter width (W_f) and calculate the filter length (L_f) using: $L_f = A_f/W_f$
- Determine the volume of storage available above the filer bed using $V_{tf} = A_f \times 2h$
- Compute the storage volume of the filter voids (V_v) by assuming a 40 percent void space and using: $V_v = 0.4 \times A_f \times d_f$
- Compute the flow through the filter during filling assuming 1 hour to fill the voids using:
  $V_q = kA_f(d_f + h)t_f / d_f$ (assume k = 0.0833 ft/hr and t_f = 1 hr)
- Compute net volume to be stored in the permanent pool awaiting filtration using:
  $V_{st} = WQ_V - V_{tf} - V_v - V_q$
- Compute the minimum length of the permanent pool using:
  $L_{pm} = V_{st}/(2h)(W_f)$

Table TC-61A: D.C. Type Underground Sand Filter Design Criteria

Parameter	Design Criteria
Maximum drainage area	1.5 acres
Filter sand size	concrete sand per Sec. 200.05.04 SSPWC*
Typical sand coefficient of permeability (k) for sand with Dmax=10 mm and Effective Size D10=0.1 mm	1.18 ft/hr**
Maximum diameter of gravel in upper gravel layer	1 in, Class C backfill (Sec. 200.03.04 SSPWC*)
Diameter of gravel in under drain gravel layer	½ to 1 in, Class B or C backfill (Sec. 200.03.03 & 200.03.04 SSPWC*)
Minimum size of under drain pipes	6-in Schedule 40 PVC
Minimum size of perforations in under drain pipes	3/8-in diameter
Minimum number of perforations per under drain pipe	6
Minimum spacing of perforations	6 in
Maximum spacing of under drain pipes	27 in center to center
Minimum volume of sediment chamber	20 percent of the WQV
Minimum length of the clearwell chamber	3 ft

*SSPWC: Standard Specifications for Public Works Construction

**USCOE, 2001 EM 1110-2-1100 Part VI

For Delaware type underground sand filters use Design-aid Worksheet TC-61(b) at www.TMstormwater.com and apply the following equations and the design criteria summarized in Table TC-61B.

- When the maximum ponding depth above the filter (2h) is less than 2.67 feet, the area of the sediment chamber (A_s) and the area of the filter chamber (A_f) can be found using the following equation: $A_s = A_f = WQ_V/(4.1h + 0.9)$
- When the maximum ponding depth above the filter (2h) is 2.67 feet or greater, use the following equation: $A_s = A_f = (WQ_V)(d_f)/k(h + d_f)t_f$
- Establish the dimensions of the facility assuming sediment chambers (A_s) and filter chambers (A_f) are typically 18 to 30 inches wide. Use of standard grates requires a chamber width of 26 inches.

Table TC-61B: Delaware Type Underground Sand Filter Design Criteria

Parameter	Design Criteria
Maximum drainage area	5 acres
Filter sand size	concrete sand per Sec. 200.05.04 SSPWC*
Typical sand coefficient of permeability (k) for sand with D_{max}=10 mm and Effective Size D_{10}=0.1 mm	1.18 ft/hr**
Maximum diameter of gravel in upper gravel layer	1 in, Class C backfill (Sec. 200.03.04 SSPWC*)
Diameter of gravel in under drain gravel layer	½ to 1 in, Class B or C backfill (Sec. 200.03.03 & 200.03.04 SSPWC*)
Weir height between sed chamber and sand filter	2 in above filter bed
Minimum size of under drain pipes	6-in Schedule 40 PVC
Minimum size of perforations in under drain pipes	3/8-in diameter
Minimum number of perforations per under drain pipe	6
Minimum spacing of perforations	6 in
Minimum weephole diameter	3 in
Minimum spacing between weepholes	9 in – center to center
Sedimentation chamber and sand filter trench width	18 to 30 in

*SSPWC: Standard Specifications for Public Works Construction

**USCOE, 2001 EM 1110-2-1100 Part VI

Inspection and Maintenance Requirements

- The life of a well-maintained underground sand filter is between 5 and 20 years.
- Upon installation, water levels should be monitored every 3 months and after each big storm for the first year. Once the system is functioning properly, monitor 3 times a year.
- Monitor and record the depth of oil and grease ponding in the first chamber, depth of water over the sand medium, and the amount of material accumulated over the sand medium.
- Pump out the sediment chamber at least twice every year. After cleaning, refill the first chamber to a depth of 3 feet with clean water to reestablish the seals.
- The filter cloth and ballast gravel must be removed and replaced when drawdown takes longer than 72 hours.
- The three chambers need built-in ladders and manholes to allow access for cleaning and maintenance.
- Filter media may need to be replaced every 3 to 5 years.

References

California Stormwater Quality Association (CASQA), 2003. California Stormwater Best Management Practice Handbook, New Development and Redevelopment.

City and County of Sacramento, 2000. Guidance Manual for Onsite Stormwater Quality Control Measures, Sacramento Stormwater Management Program.

Urban Drainage and Flood Control District (UDFCD), 1999. Urban Storm Drainage Criteria Manual, Volume 3 – Best Management Practices. Denver, Colorado.

U.S. Department of Transportation, Federal Highway Administration, Stormwater Best Management Practices in an Ultra-Urban Setting: Selection and Monitoring, Fact Sheet – Underground Sand Filters, http://www.fhwa.dot.gov/environment/ultraurb/3fs7.htm

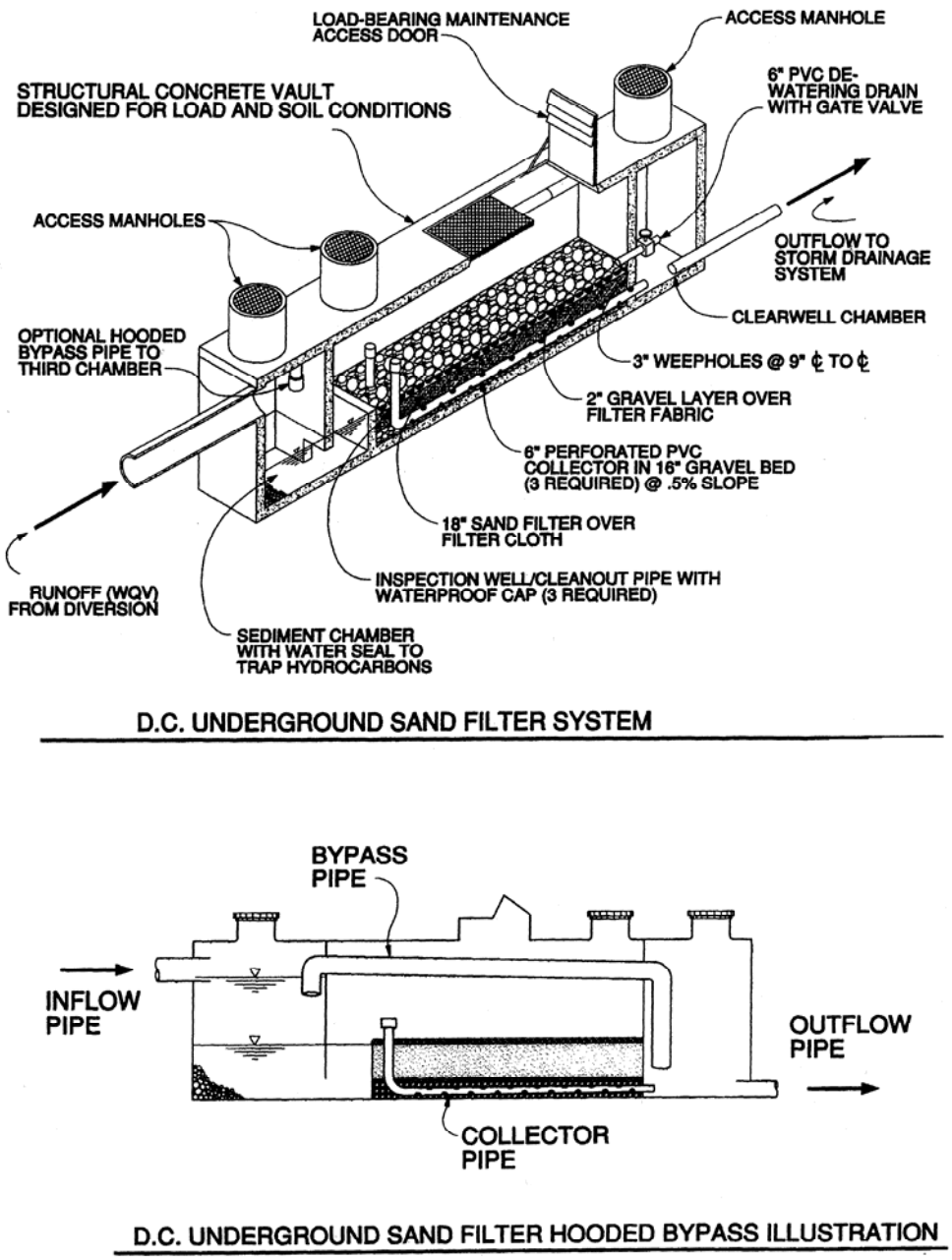

Figure TC-61A. Example of a D.C. type Underground Sand Filter (modified from Sacramento, 2000).

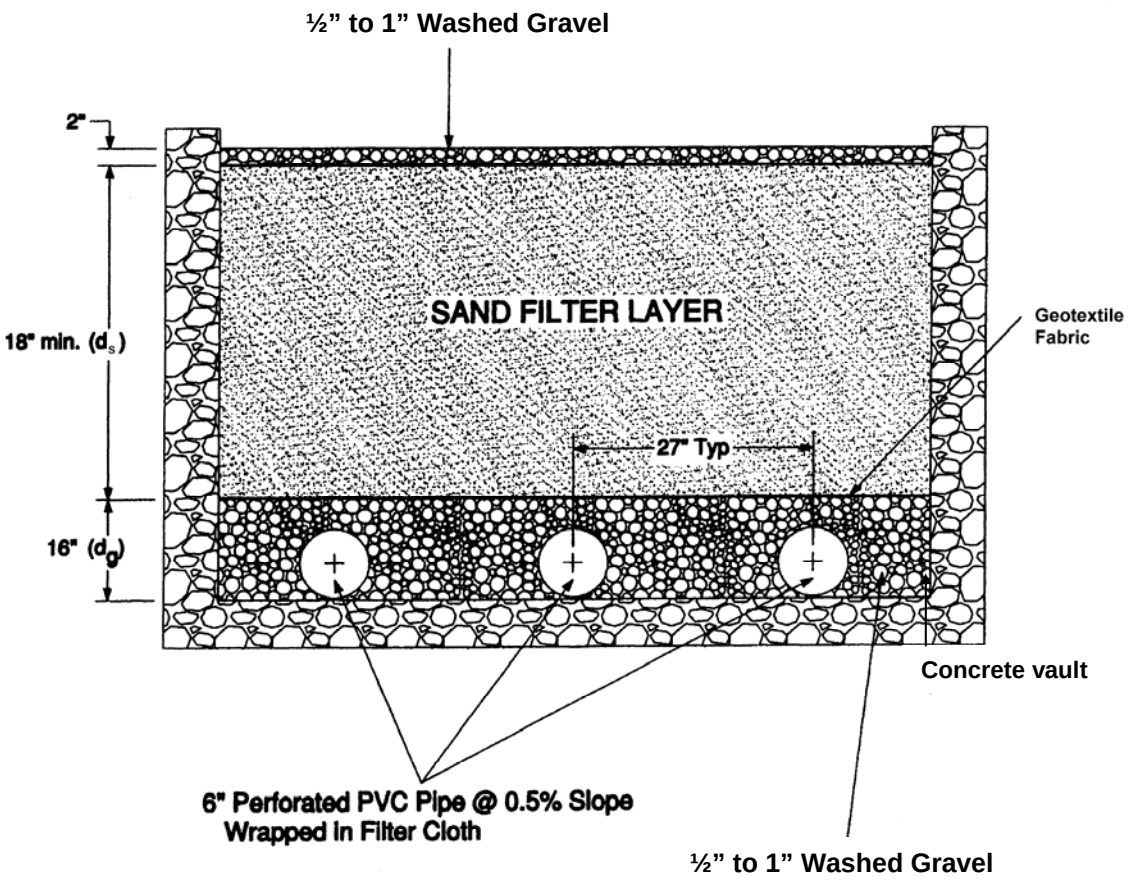

Figure TC-61B. Cross-section of a D.C. type Underground Sand Filter (modified from Sacramento, 2000).

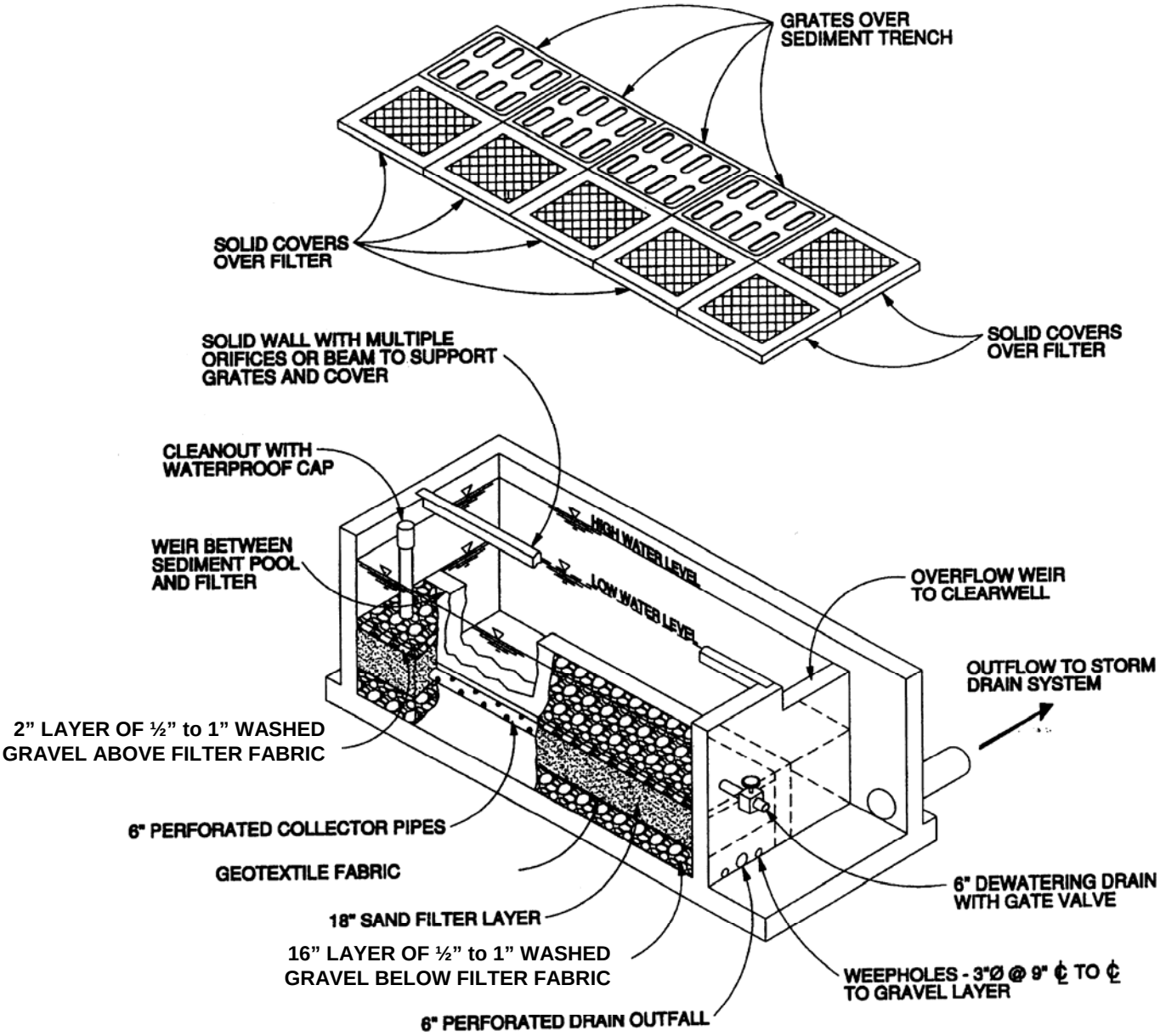

Figure TC-61C. Example of a Delaware type Underground Sand Filter (modified from Sacramento, 2000).

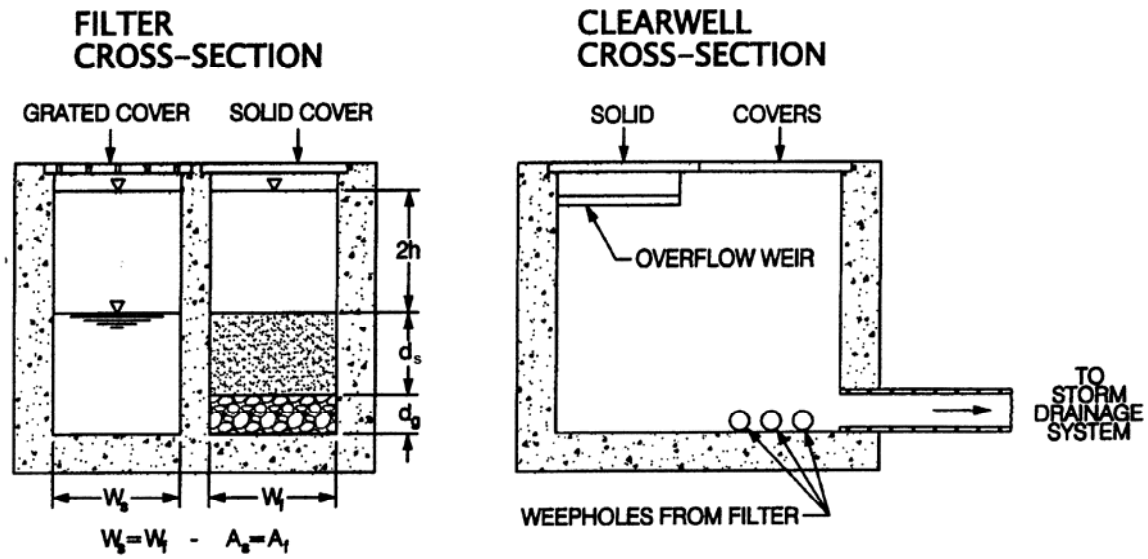

Where:
W_s = Width of sediment chamber
W_f = Width of filter
A_s = Area of sediment chamber
A_f = Area of filter
$2h$ = Maximum achievable ponding depth over filter
d_s = Depth of sand
d_g = Depth of gravel underdrain

Figure TC-61D. Cross-sections of a Delaware type Underground Sand Filter showing dimensional relationships (modified from Sacramento, 2000).

6.7 Porous Pavements

Porous paving systems allow infiltration of storm water while providing a stable load-bearing surface for walking and driving. These systems contain void spaces to provide infiltration of runoff into their underlying engineered porous materials and then into existing site soils. Generally, underlying engineered materials consist of clean sands or gravels separated from existing site soils by a synthetic filter fabric. Underlying engineered materials detain and filter pollutants prior to infiltration into underlying soils or discharge to a conventional storm drain system through an underdrain system. Porous paving systems can preserve natural drainage patterns, enhance groundwater recharge and soil moisture, and can help establish and maintain roadside vegetation. Although a good substitute for conventional concrete and asphalt, porous paving systems are typically not suitable for heavily trafficked applications. There are several different types of porous paving systems, which are referred to here as:

- Porous Pavement Detention
- Open-Celled Block Pavers
- Open-Jointed Block Pavers
- Porous Asphalt and Porous Concrete Pavement
- Porous Turf
- Porous Gravel
- Open-Celled Plastic Grids

POROUS PAVEMENT DETENTION TC-62(a)

Description

Porous pavement detention is an installation of open-celled block pavers (TC-62(b)) that is flat and is provided with a 2-inch deep surcharge zone to temporarily store the WQv. Open-celled block pavers consist of blocks or slabs made of concrete or brick with open surface voids that penetrate their surface area. The modular blocks are placed over a porous sub-base and the openings within and between the blocks are filled with pervious materials (e.g. open-graded aggregate). Porous materials such as clean gravels placed below the porous pavement detain and filter pollutants prior to infiltration into underlying soils or discharge to drainage to a conventional storm drain system.

Applications and Advantages

Porous pavement detention can be used as a substitute for conventional pavement, but should be limited to parking areas and low traffic volume roadways where little to no truck traffic is anticipated. Examples include residential driveways, residential street parking lanes, parking stalls in commercial or retail parking lots, overflow parking areas, maintenance walkways/trails, emergency vehicle and fire access lanes, stopping lanes on divided highways, equipment storage areas, and patios.

Performance Data

The literature reported range of removal for various pollutants is as follows:

Pollutant	Percent Removal Efficiency
Total Suspended Solids	70 - 90
Total Phosphorus	40 - 55
Total Nitrogen	10 - 20
Total Zinc	40 - 80
Total Lead	60 - 70

Source: UDFCD, 1999.

Limitations

- Not to be applied in heavily trafficked areas or where speeds exceed 30 miles per hour.
- Care must be taken when applying in commercial or industrial areas.
- May become clogged if not properly installed and maintained.
- Maintenance costs can be relatively high if the blocks frequently become clogged with sediment from offsite sources.
- Porous pavements may cause uneven driving surfaces and may be problematic for high heel shoes.

- May not be suitable for areas that require wheelchair access because of the pavement texture.
- Snow removal may be difficult, since plows may damage blocks if not installed correctly or performed above the block surface; sand application can result in clogging; and use of salt can result in groundwater contamination.
- Do not install sand or pavers during rain or heavy snowfall.
- Do not install over frozen base materials.

Siting Criteria

- Porous pavement detention installations should be installed in areas that are flat in all directions (i.e. 0% slope).
- Do not use in areas where the potential for spills is high (e.g. near service/gas stations, truck stops or industrial sites).
- The seasonal high water table should be more than 4 feet below the ground surface

Design and Construction Criteria

- Use Design-aid Worksheet TC-62(a) (www.TMstormwater.com)
- Registered professional civil engineers should design porous pavements.
- Calculate the Water Quality Volume as discussed in Section 3.2.2 to determine the minimum required surface area for the porous pavement detention:

  Minimum surface area = WQ_v/0.17ft
- Sub-base layers should be capable of bearing an appropriate load without deforming.
- Pervious pavements should be the last thing to install during construction or redevelopment.
- Block patterns should have a minimum surface area void space of 40 percent.
- Use an open-graded aggregate base course to provide a permeable reservoir. Class C backfill, as specified in Section 200.03.04 in Standard Specifications for Public Works Construction (SSPWC), is a locally available open-graded aggregate.
- When designing the base course, or base reservoir, to detain the water quality volume, select the appropriate porosity value for the material used.
- Strength and durability of materials under saturated conditions must be considered.
- When installing the base course, it must be compacted as it is placed in lifts.
- A bedding layer should be laid over the base course as level bedding for the blocks consisting of relatively small open-graded aggregate meeting criteria for a filter layer, or "choke layer". Class B backfill, as specified in Section 200.03.03 SSPWC, is recommended for this purpose.
- Appropriate gradations of aggregate material must be used to prevent migration of particles from one layer to the next. If this cannot be achieved, a woven geotextile

should be used under the bedding layer above the base course to prevent migration. A woven geotextile fabric layer such as SI Corporation Geotex 117F or equal can be used.

- For aggregate fill in the cells, material should consist of open-graded sand and can be the same material as the bedding material.
- An overflow, possibly with an inlet to a storm sewer, should be installed at 2 inches above the level of the porous pavement surface.
- A concrete perimeter wall should be installed to confine the edges of the block installation. The perimeter wall should be 6 inches thick and to extend 6 inches deeper than the base course, bedding layer, and block depth combined.
- Direct sediment-laden runoff away from the porous pavements.
- Filter fabrics should be placed on the bottom and sides of the sub-base layer.
- An impermeable liner should be installed under the base course to inhibit infiltration when installing over expansive soils or if the tributary area contains activities that store, manufacture, or handle fertilizers, chemicals, or petroleum products.
- To allow infiltration and prevent clogging, the filter fabric should be woven geotextile fabric layer such as SI Corporation Geotex 117F or an approved equivalent.
- Follow pavement manufactures specifications.
- During construction, do not allow construction or heavy vehicles to traverse excavated recharge beds or areas of completed porous pavement.
- Once porous pavement is in place, ensure contributing drainage areas of the construction site have erosion and sediment control measures in place and are maintained until the site is stabilized.
- The storage capacity of the stone reservoir beneath porous pavements depends upon local detention requirements and can be sized to capture, detain and filter the Water Quality Volume as discussed in Section 3.2.2.

Inspection and Maintenance Requirements

- Accumulated debris and litter removal as needed.
- Maintenance is required to prevent clogging of the pervious surface.
- Inspect sand filter routinely and after storm events to insure proper infiltration and drainage.
- Frequently inspect the pavement to insure proper infiltration and drainage during the first wet season, and then once a year following that time.
- Replacement of surface sand filter layer may occur when runoff does not infiltrate readily into the surface.

References

Balades et al., 1995. Permeable Pavements: Pollution Management Tools, Water Science and Technology. Vol. 32, No. 1, pp. 49-56, 1995.

California Stormwater Quality Association (CASQA), 2003. Stormwater Best Management Practice Handbook – New Development and Redevelopment.

City and County of Sacramento, 2000. Guidance Manual for Onsite Stormwater Quality Control Measures.

Legret and Colandini, 1999. Effects of a Porous Pavement with Reservoir Structure on Runoff Water: Water Quality and Fate of Heavy Metals, Water Science and Technology. Vol. 39, No. 2, pp. 111-117, 1999.

Newman et al., 2002. Oil Bio-Degradation in Permeable Pavements by Microbial Communities, Water Science and Technology. Vol. 45, No. 7, pp. 51-56, 2002.

Pratt et al., 1999. Mineral Oil Bio-Degradation within a Permeable Pavement: Long Term Observations, Water Science and Technology. Vol. 39, No. 2, pp. 103-109, 1999.

Urban Drainage and Flood Control District (UDFCD), 2005. Urban Storm Drainage Criteria Manual, Volume 3 – Best Management Practices.

OPEN-CELLED BLOCK PAVERS TC-62(b)

Description

Open-celled block pavers, also known as modular block pavers, consist of blocks or slabs made of concrete or brick with open surface voids that penetrate their surface area. The modular blocks are placed over a porous sub-base and the openings within and between the blocks are filled with pervious materials (e.g. open-graded aggregate). Porous materials such as clean gravels placed below the porous pavement detain and filter pollutants prior to infiltration into underlying soils or discharge to drainage to a conventional storm drain system. This type of surface reduces runoff from paved areas and the ponding that typically occurs in parking lots during and after storm events.

Applications and Advantages

Open-celled block pavers can be used as a substitute for conventional pavement, but should be limited to parking areas and low traffic volume roadways where little to no truck traffic is anticipated. Examples include residential driveways, residential street parking lanes, parking stalls in commercial or retail parking lots, overflow parking areas, maintenance walkways/trails, emergency vehicle and fire access lanes, stopping lanes on divided highways, equipment storage areas, and patios as well as alternative to conventional paving in areas where tree protection and preservation is a concern.

Performance Data

The literature reported range of removal for various pollutants is as follows:

Pollutant	Percent Removal Efficiency
Total Suspended Solids	70 - 90
Total Phosphorus	40 - 55
Total Nitrogen	10 - 20
Total Zinc	40 - 80
Total Lead	60 - 70

Source: UDFCD, 1999.

Limitations

- Not to be applied in heavily trafficked areas or where speeds exceed 30 miles per hour.
- Care must be taken when applying in commercial or industrial areas.
- May become clogged if not properly installed and maintained.
- Maintenance costs can be relatively high if the blocks frequently become clogged with sediment from offsite sources.

- Porous pavements may cause uneven driving surfaces and may be problematic for high heel shoes.
- May not be suitable for areas that require wheelchair access because of the pavement texture.
- Snow removal may be difficult, since plows may damage blocks if not installed correctly or performed above the block surface; sand application can result in clogging; and use of salt can result in groundwater contamination.
- Do not install sand or pavers during rain or heavy snowfall.
- Do not install over frozen base materials.

Siting Criteria

- Ideally, pervious pavement should be installed on flat surfaces adjacent to gently sloping conventional pavement surfaces (see Figure TC-64 A). However they can also be placed on gentle slopes that do not exceed 5 percent.
- Do not use in areas where the potential for spills is high (e.g. near service/gas stations, truck stops or industrial sites).
- The seasonal high water table should be more than 4 feet below the ground surface

Design and Construction Criteria

- Use Design-aid Worksheet TC-62(b) (www.TMstormwater.com)
- Registered professional civil engineers should design porous pavements.
- Sub-base layers should be capable of bearing an appropriate load without deforming.
- Pervious pavements should be the last thing to install during construction or redevelopment.
- Block patterns should have a minimum surface area void space of 20 percent.
- Use an open-graded aggregate base course to provide a permeable reservoir. Class C backfill, as specified in Section 200.03.04 in Standard Specifications for Public Works Construction (SSPWC), is a locally available open-graded aggregate.
- When designing the base course, or base reservoir, to detain the water quality volume, select the appropriate porosity value for the material used.
- Strength and durability of materials under saturated conditions must be considered.
- When installing the base course, it must be compacted as it is placed in lifts.
- A bedding layer should be laid over the base course as level bedding for the blocks consisting of relatively small open-graded aggregate meeting criteria for a filter layer, or “choke layer”. Class B backfill, as specified in Section 200.03.03 SSPWC, is recommended for this purpose.
- Appropriate gradations of aggregate material must be used to prevent migration of particles from one layer to the next. . If this cannot be achieved, a woven geotextile

should be used under the bedding layer above the base course to prevent migration. A woven geotextile fabric layer such as SI Corporation Geotex 117F or equal can be used.

- Open-celled block pavers are vibrated into place into the bedding layer.
- Filter fabrics should be placed on the bottom and sides of the base layer.
- An impermeable liner should be installed under the base course to inhibit infiltration when installing over expansive soils or if the tributary area contains activities that store, manufacture, or handle fertilizers, chemicals, or petroleum products.
- To allow infiltration and prevent clogging, the filter fabric should be woven geotextile fabric layer such as SI Corporation Geotex 117F or an approved equivalent.
- Edge restraints should be installed on compacted subgrade or base material, not on the bedding.
- For aggregate fill in the cells, material should consist of open-graded sand and can be the same material as the bedding material.
- A concrete perimeter wall should be installed to confine the edges of the block installation. The perimeter wall should be 6 inches thick and to extend 6 inches deeper than the base course.
- Lateral-flow cut-off barriers should be installed using a 16 mil or thicker PE or PVC impermeable membrane liner or concrete walls installed normal to flow. This prevents flow of water downstream resurfacing at the toe of the block installation. See figure
- Distance between cut-off barriers shall not exceed:

$$L_{MAX} = D/(1.5*S_o)$$

Where, L_{MAX} = Max distance between cut-off barriers normal to flow (ft)

D = Depth of the aggregate base course (ft/ft)

S_o = Slope of the base course (ft)

- An underdrain should be installed where impermeable liners are installed or when soils inhibit proper infiltration rates. Locate each underdrain pipe just upstream of the lateral-flow cut-off barrier.
- For rooting vegetation in the joints, planting medium should be sandy and open-graded. In bedding and base course a limited amount of planting medium could be mixed into open-graded aggregate to deepen rooting.
- Plant grass in open-joints as plugs or broadcast seed at a reduced rate to account for concrete grids.
- All installations should be designed and constructed to pavement manufactures specifications.
- Follow pavement manufactures specifications.
- Direct sediment-laden runoff away from the porous pavements.
- During construction, do not allow construction or heavy vehicles to traverse excavated recharge beds or areas of completed porous pavement.

- Once porous pavement is in place, ensure contributing drainage areas of the construction site have erosion and sediment control measures in place and are maintained until the site is stabilized.
- The storage capacity of the base reservoir beneath porous pavements depends upon local detention requirements and can be sized to capture, detain and filter the Water Quality Volume as discussed in Section 3.2.2.

Inspection and Maintenance Requirements

- Open-celled block pavers should not be washed to remove debris and sediment in the openings between pavers, rather sweeping with suction should be utilized annually. Replace lost sand infill.
- Joints between block pavers may require occasional weed suppression.
- Pavers can be removed individually and replaced when utility work is needed.
- Top course aggregate can be removed or replaced in pavers if they become clogged or contaminated.
- Replace surface filter layer by vacuuming out sand media from blocks when it becomes evident that runoff does not rapidly infiltrate into the surface.
- For pavers planted with turf, regular turf maintenance will be necessary. However, pesticides, fertilizers and other chemicals can have adverse effects on concrete products, so their use should be restricted.

References

Balades et al., 1995. Permeable Pavements: Pollution Management Tools, Water Science and Technology. Vol. 32, No. 1, pp. 49-56, 1995.

California Stormwater Quality Association (CASQA), 2003. Stormwater Best Management Practice Handbook – New Development and Redevelopment.

City and County of Sacramento, 2000. Guidance Manual for Onsite Stormwater Quality Control Measures.

Ferguson, B., 2005. Porous Pavements. Boca Raton, FL: CRC Press.

Legret and Colandini, 1999. Effects of a Porous Pavement with Reservoir Structure on Runoff Water: Water Quality and Fate of Heavy Metals, Water Science and Technology. Vol. 39, No. 2, pp. 111-117, 1999.

Newman et al., 2002. Oil Bio-Degradation in Permeable Pavements by Microbial Communities, Water Science and Technology. Vol. 45, No. 7, pp. 51-56, 2002.

Pratt et al., 1999. Mineral Oil Bio-Degradation within a Permeable Pavement: Long Term Observations, Water Science and Technology. Vol. 39, No. 2, pp. 103-109, 1999.

Urban Drainage and Flood Control District (UDFCD), 1999. Urban Storm Drainage Criteria Manual, Volume 3 – Best Management Practices.

OPEN-JOINTED BLOCK PAVERS TC-62(C)

Description

Open-jointed block pavers consist of solid block units made of concrete, clay, or stone that form an interlocking, flexible pavement surface. Open voids are created, by beveling the corners of each block or creating wider spacing between the blocks. The blocks themselves also commonly contain small voids to increase permeability. The modular blocks are placed over a porous sub-base and the openings within and between the blocks are filled with pervious materials (e.g. clean sand). The pavers are placed on a gravel sub-grade to detain and filter pollutants prior to infiltration into underlying soils or discharge to drainage to a conventional storm drain system. This type of surface reduces runoff from paved areas and the ponding that typically occurs in parking lots during and after storm events

Applications and Advantages

Open-jointed block pavers can be used as a substitute for conventional pavement, but should be limited to parking areas and low traffic volume roadways where little to no truck traffic is anticipated. Examples include residential driveways, residential street parking lanes, parking stalls in commercial or retail parking lots, overflow parking areas, maintenance walkways/trails, emergency vehicle and fire access lanes, stopping lanes on divided highways, equipment storage areas, and patios, as well as alternative to conventional paving in areas where tree protection and preservation is a concern.

Performance Data

The literature reported range of removal for various pollutants is as follows:

Pollutant	Percent Removal Efficiency
Total Suspended Solids	70 - 90
Total Phosphorus	40 - 55
Total Nitrogen	10 - 20
Total Zinc	40 - 80
Total Lead	60 - 70

Source: UDFCD, 1999.

Limitations

- Not to be applied in heavily trafficked areas or where speeds exceed 30 miles per hour.
- Care must be taken when applying in commercial or industrial areas.
- Do not install sand or pavers during rain or heavy snowfall.
- Do not install over frozen base materials.
- May become clogged if not properly installed and maintained.
- Maintenance costs can be relatively high if the blocks frequently become clogged with sediment from offsite sources.

- Porous pavements may cause uneven driving surfaces and may be problematic for high heel shoes.
- May not be suitable for areas that require wheelchair access because of the pavement texture.
- Snow removal may be difficult, since plows may damage blocks if not installed correctly or performed above the block surface; sand application can result in clogging; and use of salt can result in groundwater contamination.

Siting Criteria

- Do not install pavers on slopes greater than 15 percent.
- Do not use in areas where the potential for spills is high (e.g. near service/gas stations, truck stops or industrial sites).
- The seasonal high water table should be more than 4 feet below the ground surface

Design and Construction Criteria

- Use Design-aid Worksheet TC-62(c) (www.TMstormwater.com)
- Registered professional civil engineers should design porous pavements.
- Sub-base layers should be capable of bearing an appropriate load without deforming.
- Pervious pavements should be the last thing to install during construction or redevelopment.
- Consult a qualified engineer, architect, and/or landscape architect for paver applications.
- To be installed by a qualified contractor experienced in paver applications.
- Block patterns should have a minimum surface area void space of 8 percent.
- Use an open-graded aggregate base course to provide a permeable reservoir. Class C backfill, as specified in Section 200.03.04 in Standard Specifications for Public Works Construction (SSPWC), is a locally available open-graded aggregate.
- When designing the base course, or base reservoir, to detain the water quality volume, select the appropriate porosity value for the material used.
- Strength and durability of materials under saturated conditions must be considered.
- When installing the base course, it must be placed and compacted in maximum 12 inch thick lifts.
- A bedding layer should be laid over the base course as level bedding for the blocks consisting of relatively small open-graded aggregate meeting criteria for a filter layer, or “choke layer”. Class B backfill, as specified in Section 200.03.03 SSPWC, is recommended for this purpose.
- Do not use concrete sand, which is traditionally used for interlocking concrete pavement bedding layer construction and has been shown to have low permeability.

- Appropriate gradations of aggregate material must be used to prevent migration of particles from one layer to the next. If this cannot be achieved, a geotextile should be used under the bedding layer above the base course to prevent migration.
- Filter fabrics should be placed on the bottom and sides of the base layer.
- Impermeable liner should be installed under the base course to inhibit infiltration when installing over expansive soils or if the tributary area contains activities that store, manufacture, or handle fertilizers, chemicals, or petroleum products.
- To allow infiltration and prevent clogging, the filter fabric should be woven geotextile fabric layer such as SI Corporation Geotex 117F or an approved equivalent.
- Edge restraints are required around the perimeter and should be installed on compacted subgrade or base material, not on the bedding.
- Joint-fill material should consist of Class D backfill, Section 200.03.04 SSPWC.
- Do not sweep sand into the joints after the pavers are installed to fill joints as this can compromise the permeability and porosity of pavers.
- A concrete perimeter wall should be installed to confine the edges of the block installation. The perimeter wall should be 6 inches thick and to extend 6 inches deeper than the base course.
- Lateral-flow cut-off barriers should be installed using a 16 mil or thicker PE or PVC impermeable membrane liner or concrete walls installed normal to flow. This prevents flow of water downstream resurfacing at the toe of the block installation.
- Distance between cut-off barriers shall not exceed:

$$L_{MAX} = D/(1.5*S_o)$$

Where, L_{MAX} = Max distance between cut-off barriers normal to flow (ft)

D = Depth of the aggregate base course (ft/ft)

S_o = Slope of the base course (ft)

- An underdrain should be installed where impermeable liners are installed or when soils inhibit proper infiltration rates. Locate each underdrain pipe just upstream of the lateral-flow cut-off barrier.
- For rooting vegetation in the joints, planting medium should be sandy and open-graded. In bedding and base course a limited amount of planting medium could be mixed into open-graded aggregate to deepen rooting.
- Cut pavers with a paver splitter or masonry saw. Cut pavers should be no smaller than one-third of the full unit size along edges subject to vehicular traffic.
- All installations should be designed and constructed to pavement manufactures specifications.
- Direct sediment-laden runoff away from the porous pavements.
- During construction, do not allow construction or heavy vehicles to traverse excavated recharge beds or areas of completed porous pavement.

- Once porous pavement is in place, ensure contributing drainage areas of the construction site have erosion and sediment control measures in place and are maintained until the site is stabilized.
- The storage capacity of the base reservoir beneath porous pavements depends upon local detention requirements and can be sized to capture, detain and filter the Water Quality Volume as discussed in Section 3.2.2.

Inspection and Maintenance Requirements

- Blocks should not be washed to remove debris and sediment in the openings between pavers, rather sweeping with suction should be utilized annually. Replace lost sand infill.
- Joints between pavers may require occasional weed suppression.
- Pavers can be removed individually and replaced when utility work is needed.
- Replace surface filter layer by vacuuming out sand media from blocks when it becomes evident that runoff does not rapidly infiltrate into the surface. If vacuuming does not adequately remove fill, blocks can be lifted and reset with new joint fill material.
- If soils swell or subside, blocks can be removed individually, the base leveled, and blocks reset.

References

Balades et al., 1995. Permeable Pavements: Pollution Management Tools, Water Science and Technology. Vol. 32, No. 1, pp. 49-56, 1995.

California Stormwater Quality Association (CASQA), 2003. Stormwater Best Management Practice Handbook – New Development and Redevelopment.

Florida Department of Environmental Protection. 1988. Florida Development Manual: A Guide to Sound Land and Water Management Volume 2, Chapter 6. http://www.dep.state.fl.us/water/nonpoint/docs/nonpoint/erosed_bmp.pdf

City and County of Sacramento, 2000. Guidance Manual for Onsite Stormwater Quality Control Measures.

Ferguson, B., 2005. Porous Pavements. Boca Raton, FL: CRC Press.

Legret and Colandini, 1999. Effects of a Porous Pavement with Reservoir Structure on Runoff Water: Water Quality and Fate of Heavy Metals, Water Science and Technology. Vol. 39, No. 2, pp. 111-117, 1999.

Newman et al., 2002. Oil Bio-Degradation in Permeable Pavements by Microbial Communities, Water Science and Technology. Vol. 45, No. 7, pp. 51-56, 2002.

Pratt et al., 1999. Mineral Oil Bio-Degradation within a Permeable Pavement: Long Term Observations, Water Science and Technology. Vol. 39, No. 2, pp. 103-109, 1999.

Urban Drainage and Flood Control District (UDFCD), 1999. Urban Storm Drainage Criteria Manual, Volume 3 – Best Management Practices.

POROUS CONCRETE AND ASPHALT TC-62(d)

Description

Porous concrete and asphalt both make a continuous, smooth paving surface like their impervious counterparts. However, they are made by binding open-graded aggregate, and therefore contain void spaces that allow water to pass through to a permeable subbase layer. Porous materials such as clean gravels placed below the porous concrete or asphalt detain and filter pollutants prior to infiltration into the underlying soils or discharge to an underdrain and the conventional storm drain system.

Applications and Advantages

Porous concrete and asphalt are ideal for light to medium duty applications such as residential access roads, residential street parking lanes, parking lot stalls in parking lots, overflow parking areas, utility access, sidewalks, bike paths, maintenance walkways/trails, residential driveways, stopping lanes on divided highways, and patios. Porous asphalt has, however, also been used in heavy applications such as airport runways and highways because its porosity creates a favorable driving surface in rainy weather (BASMAA, 1999).

Porous concrete and asphalt can also reduce icing hazards during winter freeze and thaw cycles as runoff will tend to infiltrate rather than freeze onto the surface of roadways, parking lots, driveways and sidewalks.

Performance Data

The literature reported range of removal for various pollutants is as follows:

Pollutant	Percent Removal Efficiency
Total Suspended Solids	70 - 90
Total Phosphorus	40 - 55
Total Nitrogen	10 - 20
Total Zinc	40 - 80
Total Lead	60 - 70

Source: UDFCD, 1999.

Limitations

- Typically not to be applied on streets where speeds exceed 30 mph or streets that experience high-traffic loads.
- Not recommended for slopes over 5 percent.
- Not applicable where the seasonal high groundwater table is less than 3 feet below the bottom of the gravel sub-base.
- Sand and salt applied to porous roadways, parking lots, and sidewalks in winter can clog void spaces and render permeability ineffective if not removed annually.

- Porous concrete may experience raveling if not properly installed.
- Porous asphalt and concrete may become clogged if not protected from nearby construction activities, areas of bare soil without landscaping, downslope of steep, erosion-prone areas, or when not maintained.
- Applications with underdrain systems are typically more expensive than conventional asphalt and concrete.
- Porous asphalt and concrete should be avoided in drainage areas with activities generate highly contaminated runoff.
- Not to be applied in areas where wind erosion supplies significant amounts of windblown sediments.

Siting Criteria

- Ideally, pervious pavement should be installed on flat surfaces adjacent to gently sloping conventional pavement surfaces (see Figure TC-64 A). However they can also be placed on gentle slopes that do not exceed 5 percent.
- Do not use in areas where the potential for spills is high (e.g. near service/gas stations, truck stops or industrial sites).
- The seasonal high water table should be more than 3 feet below the bottom of the gravel sub-base.

Design and Construction Criteria

- Use Design-aid Worksheet TC-62(d) (www.TMstormwater.com)
- Registered professional civil engineers should design porous pavements
- Avoid installing in high traffic areas.
- Slopes should be flat or very gentle (less than 5 percent).
- Pretreatment recommended to treat runoff from surrounding areas.
- Filter fabric should be placed on the bottom and sides of the subbase reservoir.
- Impermeable liner should be installed under the base course to inhibit infiltration when installing over expansive soils or if the tributary area contains activities that store, manufacture, or handle fertilizers, chemicals, or petroleum products.
- To allow infiltration and prevent clogging, the filter fabric should be woven geotextile fabric layer such as SI Corporation Geotex 117F or an approved equivalent.
- Use an open-graded aggregate to provide open voids in the gravel subbase.
- Erosion and sediment introduction from surrounding areas must be strictly controlled during and after construction to prevent clogging of void spaces in base material and permeable surface.
- Install porous asphalt and concrete towards the end of construction activities to minimize sediment problems.

- During construction, do not allow construction or heavy vehicles to traverse excavated recharge beds or areas of completed porous pavement.
- During emplacement of porous concrete, boards should be used to separate individual pours and to produce uniform seams between adjacent pours.
- The surface of each pour should be finished as soon as possible as porous concrete can set up very rapidly in our local arid environment.
- Overall project cost savings can be realized where porous asphalt or concrete is installed in well draining soils (e.g. infiltration rates of 0.5 in/hr (120 min/in) or greater), and conventional storm drain pipes and catch basins can be reduced.

Inspection and Maintenance Requirements

- The overall maintenance goal is to avoid clogging of the void spaces.
- Accumulated debris and litter should be routinely removed as a source control measure.
- Inspect porous asphalt and concrete several times during the first few storms to insure proper infiltration and drainage. After the first year, inspect at least once a year.
- Permeable pavements and materials should be cleaned with a vacuum-type street cleaner a minimum of twice a year (before and after the winter).
- Hand held pressure washers can be effective for cleaning the void spaces of small areas and should follow vacuum cleaning.
- Maintenance personnel must be instructed not to seal or pave with non-porous materials.
- Pavement must not be sanded in the winter to avoid clogging the void spaces.

References

Bay Area Stormwater Management Agencies Association (BASMAA). 1999. *Start at the Source: Design Guidance Manual for Stormwater Quality Protection.* Prepared by Tom Richman & Associates. www.basmaa.org

Briggs, J.F., Houle, J.P., Roseem, R.M., and Ballestero, T.P. 2005. Hydraulic and Hydrologic Performance of Porous Asphalt Pavement. StormCon 2005.

EPA. 1999. Storm Water Technology Fact Sheet: Porous Pavement. Office of Water, Washington, D.C.

Hun-Dorris, Tara. 2005. Advances in Porous Pavement. *Stormwater, March/April, volume 6(2).* http://www.forester.net/sw_0503_toc.html

Puget Sound Action Team. 2005. *Low Impact Development: Technical Guidance Manual for Puget Sound.* Olympia, WA. http://www.psat.wa.gov/Publications/LID_tech_manual05/LID_manual2005.pdf

ToolBase Services. *Permeable Pavement.* http://www.toolbase.org/tertiaryT.asp?TrackID=&DocumentID=2160&CategoryID=38

Description

Porous turf pavement is a stabilized grass surface that can support intermittent pedestrian or vehicular traffic, underlain by an open-graded (single-sized) sandy root zone, and a permeable aggregate base course. Porous turf pavement applications should be applied when the appearance of grass is desired, but a load bearing capability of a pavement surface is needed. The turf surface can be either reinforced or unreinforced, with reinforced turf containing synthetic reinforcement that assists the turf in resisting wear and compaction, allowing it to bear a heavier traffic load. Advantages of porous turf pavement include the appearance of a "green space" when not used for parking, as well as the benefit of a living surface which actively cools by transpiration counteracting the urban heat island effect (Ferguson, 2005).

Applications and Advantages

Porous turf pavement is suitable for any area that desire turf application and also for parking areas with frequencies of up to once per week. Ideal settings are sports fields, overflow parking areas, church and football stadium parking lots, event parking, roadway shoulders, parking lanes, crossover lanes on divided highways, flea market parking, and maintenance roads and trails. The suitable application of these porous turf pavement applications for parking lots would be to have the vehicle movement lanes leading up to the porous turf constructed of another type of material such as porous concrete or asphalt pavement (i.e. porous turf parking pads with porous concrete or asphalt lanes). This reduces grass wear from excessive traffic on the porous turf surface, decreasing the porosity and increasing maintenance. Porous turf applications can also be multiuse facilities, for example a sports field that also serves as a special event parking lot.

Performance Data

The literature reported range of removal for various pollutants is as follows:

Pollutant	Percent Removal Efficiency
Total Suspended Solids	70 - 90
Total Phosphorus	40 - 55
Total Nitrogen	10 - 20
Total Zinc	40 - 80
Total Lead	60 - 70

Source: UDFCD, 1999.

Limitations

- Not to be applied in heavily trafficked areas, grass wear can result.
- Until grass is established, surface cannot be used.
- Requires supplemental irrigation.
- A uniformly graded vegetative cover is required to function properly.
- Excessive traffic can cause soil compaction and reduce infiltration.
- Weed invasion can result from thinning of grass cover.
- Turning action of vehicles can be problematic for porous turf, damaging structure of the leaves and sometimes causing root damage.
- May be problematic for high-heeled shoes. Smooth-soled shoes can slip on wet grass.
- Grass species should be selected based on wear tolerance and irrigation needs for specific site conditions.
- Grass selection, traffic control, and good maintenance for health and vigor are all important for turfgrass wear prevention and recovery.

Siting Criteria

- Do not use in areas where the potential for spills is high (e.g. near service/gas stations, truck stops or industrial sites).
- The seasonal high water table should be more than 4 feet below the ground surface
- Must be installed only in settings where they will be free of traffic on a predictable schedule for maintenance.

Design and Construction Criteria

- Use Design-aid Worksheet TC-62(e) (www.TMstormwater.com)
- Registered professional civil engineers should design porous pavements.
- Sub-base layers should be capable of bearing an appropriate load without deforming.
- Pervious pavements should be the last thing to install during construction or redevelopment.
- When designing the sub-base reservoir to detain the water quality volume, select the appropriate porosity value for the sub-base material used.
- Direct sediment-laden runoff away from the porous pavements.
- During construction, do not allow construction or heavy vehicles to traverse excavated recharge beds or areas of completed porous pavement.
- The surface course, or root zone, should consist of an aggregate meeting the gradation requirements from Section 200.05.04 of Standard Specifications for Public Works Construction (SSPWC).

- The sandy root zone should have a thickness of 12 inches.
- A permeable aggregate base course should be constructed of Class C or Class B backfill, Section 200.03.03 and Section 200.03.04 SSPWC.
- If Class C backfill is used, a woven filter fabric should be installed between the root zone and the aggregate base course.
- To allow infiltration and prevent clogging, the filter fabric should be woven geotextile fabric layer such as SI Corporation Geotex 117F or an approved equivalent.
- The aggregate base course should be at least several inches thick.
- The storage capacity of the open-graded aggregate base course depends upon local detention requirements and can be sized to capture, detain and filter the Water Quality Volume as discussed in Section 3.2.2.
- If needed, a filter fabric or a filter layer of coarse sand 2 to 4 inches in depth can be installed between the root zone and aggregate base course.
- An impermeable liner is required under the base course when installing over expansive soils or if the tributary may have activities that store, manufacture, or handle fertilizers, chemical, or petroleum products.
- Underdrains are required for installations over NRCS type C or D soils with infiltration rates of 0.5 in/hr (120 min/in) or less or when an impermeable membrane liner is needed.
- Turf should be installed by laying sod, seeding, or sprigging. Root zone material should be tested by a qualified lab and soil treated with appropriate lime or fertilizer as recommended for establishment success.
- Proprietary meshes, mats, and fibers are available for reinforcing turf root zones.
- Turf can also be installed in open-celled grids or pavers.
- Once porous pavement is in place, ensure contributing drainage areas of the construction site have erosion and sediment control measures in place and are maintained until the site is stabilized.
- Allow turf at least one full growing season to establish before use.
- If seeding, seed in the fall or early spring to avoid heat stress.

Inspection and Maintenance Requirements

- Porous turf requires regular maintenance associated with regular lawns such as irrigation, mowing, fertilization, aeration, topdressing, overseeding, disease control, insect control, and weed management.
- Soil testing should be conducted at least once every other year to determine proper fertilization, which will help to maintain turf stress tolerance.
- Routine mowing will be required in the growing season.

- Above ground biomass is important in wear tolerance, therefore high mowing can increase a grasses resistance to traffic stress. Mowing patters should also be altered regularly to limit wear from repetitive wheel action.
- Reseeding may be required to maintain a uniform turf cover.
- Topdressing material should be at least as coarse and open-graded as the root zone.
- To aid in water conservation, irrigation operations should be scheduled as follows:
  - After the ground has thawed, or in the month of March – two deep waterings
  - As the weather begins to warm in April and May – once per week
  - In June, July and August – up to twice per week
  - As the weather begins to cool in September – cut back to deep watering once a week, then once every two weeks
  - Do not water from November to March while lawn is dormant!
  - Water in the early morning during the summer to reduce water lost to evaporation and spray drift caused by wind.
- Traffic routes can be spread out or rotated to give the turf time to recover between uses. Traffic control can also divert traffic away from areas which are showing signs of wear.
- Snow removal operations can damage turf surfaces. Equip snow plow blades with skids or rollers to keep the plow surface one or two inches above the turf surface.

References

Bay Area Stormwater Management Agencies Association (BASMAA). 1999. *Start at the Source: Design Guidance Manual for Stormwater Quality Protection.* Prepared by Tom Richman & Associates. www.basmaa.org

Ferguson, B. 2005. Porous Pavements. CRC Press, Florida.

Hun-Dorris, Tara. 2005. Advances in Porous Pavement. *Stormwater, March/April, volume 6(2).* http://www.forester.net/sw_0503_toc.html

Post, C. and M. Mills. 2002. The All Seeing All Knowing Lawn Care Manual. University of Nevada Cooperative Extension SP-93-02 http://www.unce.unr.edu/publications/SP93/SP9302.pdf

Puget Sound Action Team. 2005. *Low Impact Development: Technical Guidance Manual for Puget Sound.* Olympia, WA. http://www.psat.wa.gov/Publications/LID_tech_manual05/LID_manual2005.pdf

Truckee Meadows Water Authority. Landscaping in the Truckee Meadows.

POROUS GRAVEL PAVEMENT TC62(f)

Description

Porous gravel pavement, or crushed aggregate, consists of a loose gravel-surface paving placed over a porous sub-base. Porous materials such as clean gravels placed below the porous pavement detain and filter pollutants prior to infiltration into underlying soils or discharge to drainage to a conventional storm drain system. This type of pavement reduces runoff from paved areas and the ponding that typically occurs in parking lots during and after storm events.

Application

Porous gravel pavement can be used as a substitute for conventional pavement. It is most appropriate for industrial sites and uses such as storage yards or for vehicle parking. Other examples include residential driveways, residential street parking, low vehicle movement zones such as parking lots and maintenance roads, maintenance walkways/trails, and stopping lanes on divided highways.

Performance Data

The literature reported range of removal for various pollutants is as follows:

Pollutant	Percent Removal Efficiency
Total Suspended Solids	70 - 90
Total Phosphorus	40 - 55
Total Nitrogen	10 - 20
Total Zinc	40 - 80
Total Lead	60 - 70

Source: UDFCD, 1999.

Limitations

- Not to be applied in heavily trafficked areas or where speeds exceed 30 miles per hour.
- Care must be taken when applying in commercial or industrial areas.
- May become clogged if not properly installed and maintained.
- Porous pavements may cause uneven driving surfaces and may be problematic for high heel shoes.

Siting Criteria

- Ideally, pervious gravel pavement should be installed on flat surfaces adjacent to gently sloping conventional pavement surfaces (see Figure TC-64 A). However they can also be placed on gentle slopes that do not exceed 5 percent.

- Do not use in areas where the potential for spills is high (e.g. near service/gas stations, truck stops or industrial sites).
- The seasonal high water table should be more than 4 feet below the ground surface

Design and Construction Criteria

- Use Design-aid Worksheet TC-62(f) (www.TMstormwater.com)
- Registered professional civil engineers should design porous pavements.
- Sub-base layers should be capable of bearing an appropriate load without deforming.
- Pervious pavements should be the last thing to install during construction or redevelopment.
- Use a single size grading to provide open voids between sand or gravel sub-bases.
- When designing the sub-base reservoir to detain the water quality volume, select the appropriate porosity value for the sub-base material used.
- Direct sediment-laden runoff away from the porous pavements.
- Thickness of porous gravel layer should be designed to support the traffic and vehicle loads pavement will need to carry.
- Filter fabrics should be placed on the bottom and sides of the sub-base layer.
- An impermeable liner is required under the base course when installing over expansive soils or if the tributary may have activities that store, manufacture, or handle fertilizers, chemical, or petroleum products.
- To allow infiltration and prevent clogging, the filter fabric should be woven geotextile fabric layer such as SI Corporation Geotex 117F or an approved equivalent.
- Lateral-flow cut-off barriers should be installed using a 16 mil or thicker PE or PVC impermeable membrane liner or concrete walls installed normal to flow. This prevents flow of water downstream resurfacing at the toe of the block installation.
- Distance between cut-off barriers shall not exceed:

$$L_{MAX} = D/(1.5*S_o)$$

Where, L_{MAX} = Max distance between cut-off barriers normal to flow (ft)

D = Depth of the aggregate base course (ft/ft)

S_o = Slope of the base course (ft)

- Underdrains are required for installations over NRCS type D soils or when an impermeable membrane liner is needed. Locate each underdrain pipe just upstream of the lateral-flow cut-off barrier.
- A sand filter layer is required for installations over expansive soils or when underdrains are required.
- A woven geotextile fabric layer such as SI Corporation Geotex 117F or equal should be placed on top of and below the sand filter layer.

- During construction, do not allow construction or heavy vehicles to traverse excavated recharge beds or areas of completed porous pavement.
- Once porous pavement is in place, ensure contributing drainage areas of the construction site have erosion and sediment control measures in place and are maintained until the site is stabilized.
- The storage capacity of the stone reservoir beneath porous pavements depends upon local detention requirements and can be sized to capture, detain and filter the Water Quality Volume as discussed in Section 3.2.2.

Inspection and Maintenance Requirements

- Accumulated debris and litter removal as needed.
- Maintenance is required to prevent clogging of the pervious surface.
- Occasional weed suppression may be required.
- Periodic replenishing and/or raking of displaced gravel may be required.
- Inspect sand filter routinely and after storm events to insure proper infiltration and drainage.
- Frequently inspect the pavement to insure proper infiltration and drainage during the first wet season, and then once a year following that time.
- Replacement of surface sand filter layer may occur when runoff does not infiltrate readily into the surface.
- Inspect surface gravels once a year. When inspections show accumulation of sediment and debris on top of gravel or slow infiltration, remove and replace top few inches of gravel.

References

Balades et al., 1995. Permeable Pavements: Pollution Management Tools, Water Science and Technology. Vol. 32, No. 1, pp. 49-56, 1995.

California Stormwater Quality Association (CASQA), 2003. Stormwater Best Management Practice Handbook – New Development and Redevelopment.

City and County of Sacramento, 2000. Guidance Manual for Onsite Stormwater Quality Control Measures.

Legret and Colandini, 1999. Effects of a Porous Pavement with Reservoir Structure on Runoff Water: Water Quality and Fate of Heavy Metals, Water Science and Technology. Vol. 39, No. 2, pp. 111-117, 1999.

Newman et al., 2002. Oil Bio-Degradation in Permeable Pavements by Microbial Communities, Water Science and Technology. Vol. 45, No. 7, pp. 51-56, 2002.

Pratt et al., 1999. Mineral Oil Bio-Degradation within a Permeable Pavement: Long Term Observations, Water Science and Technology. Vol. 39, No. 2, pp. 103-109, 1999.

Urban Drainage and Flood Control District (UDFCD), 1999. Urban Storm Drainage Criteria Manual, Volume 3 – Best Management Practices.

OPEN-CELLED PLASTIC GRIDS TC-62(g)

Description

Open-celled plastic grids, also known as geocells, are manufactured plastic lattices which can be filled with aggregate or topsoil and planted with turf. Many of these systems are made from recycled plastics. The grid systems contain hollow rings or hexagonal cells from 1 to 2 inches thick and a few inches wide. Since the cells occupy very little surface area in most systems, they appear as a turf or gravel surface. Some models are also joined at the bottom by either a perforated plastic sheet or geotextile fused to the bottom of the grid which is placed on the underlying base course. It is important that this area is open for rooting of grasses. Most open-celled grid systems are flexible, so they are tolerant of swelling or freezing soils and are applicable on uneven sites.

Applications and Advantages

Open-celled grids should be limited to low intensity use and areas with low traffic speeds. Examples include driveways, residential street parking lanes, parking stalls in commercial or retail parking lots, overflow parking areas, maintenance walkways/trails, utility access, ATV and off-road bike trails, golf cart paths, emergency vehicle and fire access lanes, loading areas, and alleys.

Performance Data

The literature reported range of removal for various pollutants is as follows:

Pollutant	Percent Removal Efficiency
Total Suspended Solids	70 - 90
Total Phosphorus	40 - 55
Total Nitrogen	10 - 20
Total Zinc	40 - 80
Total Lead	60 - 70

Source: UDFCD, 1999.

Limitations

- Sharp turning on grids should be avoided.
- May be problematic for high-heeled shoes.
- Irrigation of porous turf installation in open-celled grids has the potential to require heavier irrigation than normal due to the low water holding capacity of the soil in grids.
- Slopes should not exceed 5%.
- Not to be applied in heavily trafficked areas or where speeds exceed 20 miles per hour.

Siting Criteria

- Ideally, pervious pavement should be installed on flat surfaces adjacent to gently sloping conventional pavement surfaces (see Figure TC-64 A). However they can also be placed on gentle slopes that do not exceed 5 percent.
- Do not use in areas where the potential for spills is high (e.g. near service/gas stations, truck stops or industrial sites).
- The seasonal high water table should be more than 4 feet below the ground surface

Design and Construction Criteria

- Use Design-aid Worksheet TC-62(g) (www.TMstormwater.com)
- Registered professional civil engineers should design porous pavements.
- Sub-base layers should be capable of bearing an appropriate load without deforming.
- Pervious pavements should be the last thing to install during construction or redevelopment.
- An open-graded permeable base course should be constructed according to manufacturers' specifications.
- The storage capacity of the open-graded aggregate base course depends upon local detention requirements and can be sized to capture, detain and filter the Water Quality Volume as discussed in Section 3.2.2.
- Lattices come in pre-assembled panels or rolls in various dimensions, from a few square feet to rolls that can be spread out to cover large areas.
- Grids need to be anchored to the base in some applications, depending on the model, to prevent being jarred by moving traffic. Anchors may consist of plastic spikes, pins, or rods, or even boulders, logs, or wheel stops over the surface.
- A setting bed of smaller aggregate may be needed over the base course to make a uniform surface for the open-celled grids.
- Woven filter fabrics should be placed on the bottom and sides of the base course layer.
- An impermeable liner is required under the base course when installing over expansive soils or if the tributary may have activities that store, manufacture, or handle fertilizers, chemical, or petroleum products.
- To allow infiltration and prevent clogging, the filter fabric should be woven geotextile fabric layer such as SI Corporation Geotex 117F or an approved equivalent.
- Underdrains are required for installations over NRCS type D soils or when an impermeable membrane liner is needed.

For Open-Celled Grids filled with Aggregate

- Aggregate fill must be open-graded aggregate, with common installation sizes being Class B backfill, Section 200.03.03 Standard Specifications for Public Works Construction (SSPWC).

- Aggregate is compacted into place with a vibrating plate or roller.
- Follow manufacturer's specifications for top course installation.

For Open-Celled Plastic Grids planted with Turf

- The planting medium should be settled into cells by vibrating or watering.
- The planting medium should consist of open-graded fine aggregate conforming to SSPWC Section 200.05.04.
- Sod should only be installed with thin-walled grid systems.
- Sod can be installed by pressing into empty cells. Sod should be cut to a depth of the grid system.
- Anchoring may protect growing grass roots and promote deeper rooting, which will add strength to pavement structure.
- If filter fabric is needed on top of the base course, instead an open-graded aggregate filter layer may be used.
- Traffic should not be allowed on the surface until after turf is established.

Inspection and Maintenance Requirements

- Equip snow plow blades with skids or rollers to keep the plow surface one or two inches above the surface.
- Sections can be removed and replaced for utility access and pavement repair.
- Remove and replace grid segments where three or more adjacent rings are broken or damaged.

For Open-Celled Plastic Grids filled with aggregate

- Accumulated debris and litter removal as needed.
- Maintenance is required to prevent clogging of the pervious surface.
- Occasional weed suppression may be required.
- Periodic replenishing and/or raking of displaced gravel may be required.
- Inspect surface gravels once a year. When inspections show accumulation of sediment and debris on top of gravel or slow infiltration, remove and replace top few inches of gravel.

For Open-Celled Plastic Grids planted with turf

- For open-celled grids filled with turf, mechanical aeration of must be avoided, as this can damage the plastic material.
- See maintenance requirements for TC-62(e) Porous Turf.

References

Ferguson, B. 2005. *Porous Pavements*. Boca Raton, FL: CRC Press.

Hun-Dorris, T. 2005. Advances in Porous Pavements. *Stormwater, March/April, volume 6(2).* http://www.forester.net/sw_0503_toc.html

Puget Sound Action Team. LID Technical Guidance Manual for the Puget Sound.

Urban Drainage and Flood Control District (UDFCD), 2005. Urban Storm Drainage Criteria Manual, Volume 3 – Best Management Practices.

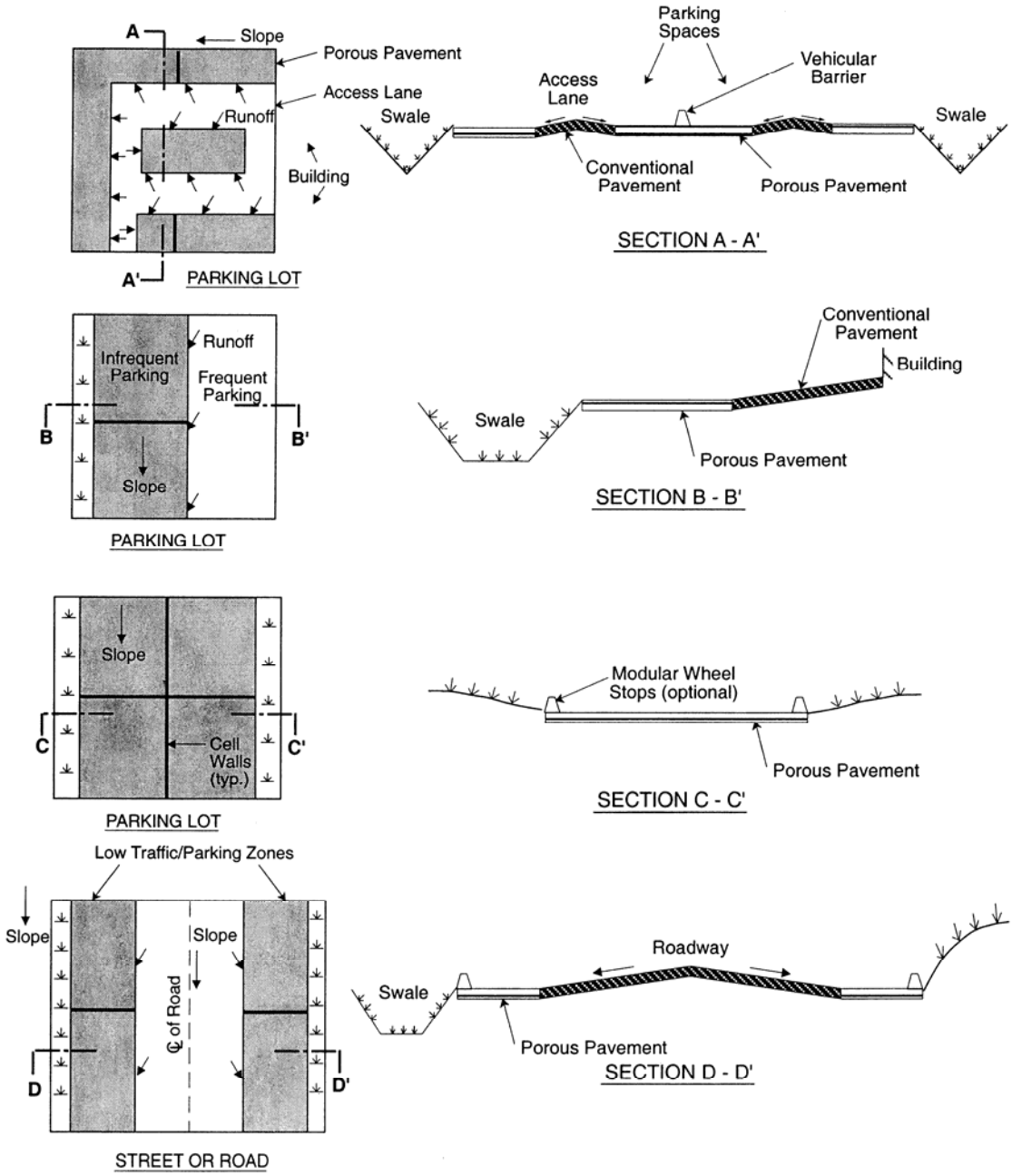

Figure TC-64 A. Typical roadway applications for Porous Pavement (modified from UDFCD, 2005)

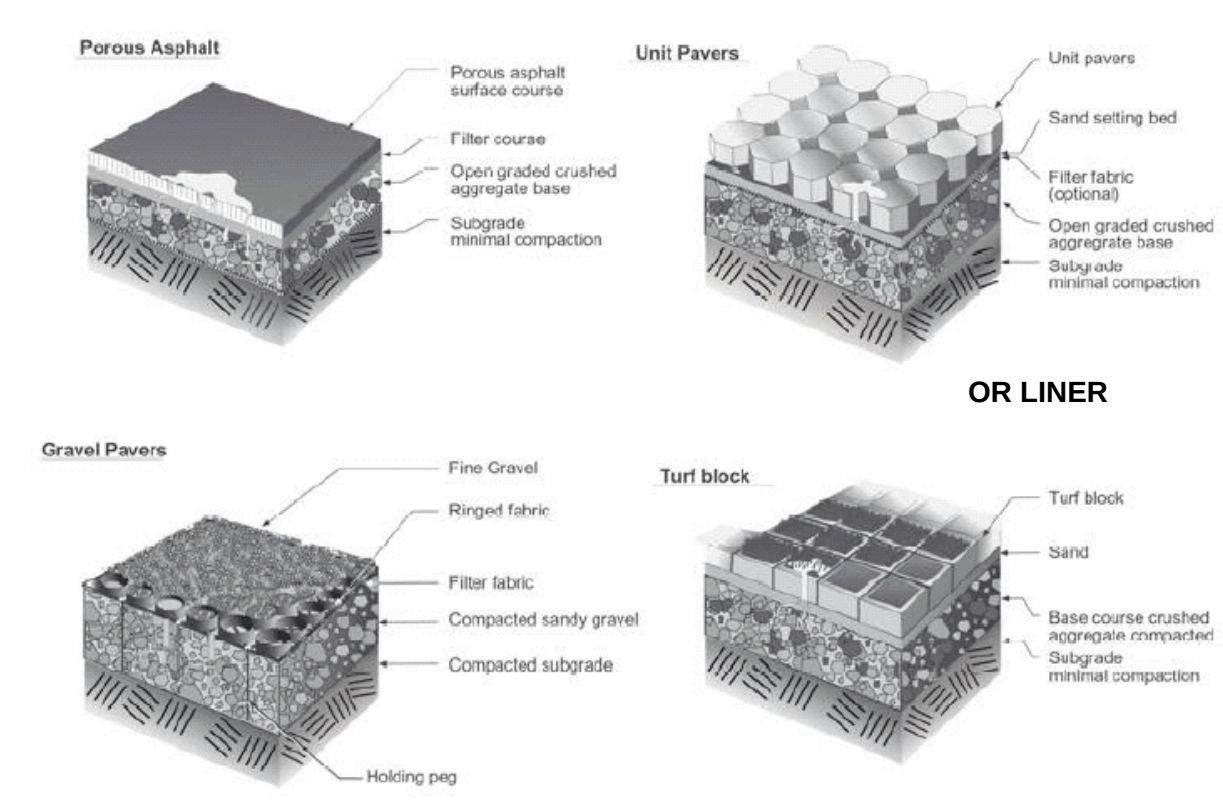

Figure TC-64 B. Cross-section of typical porous pavement installation and different types of porous pavement (from Sacramento, 2000).

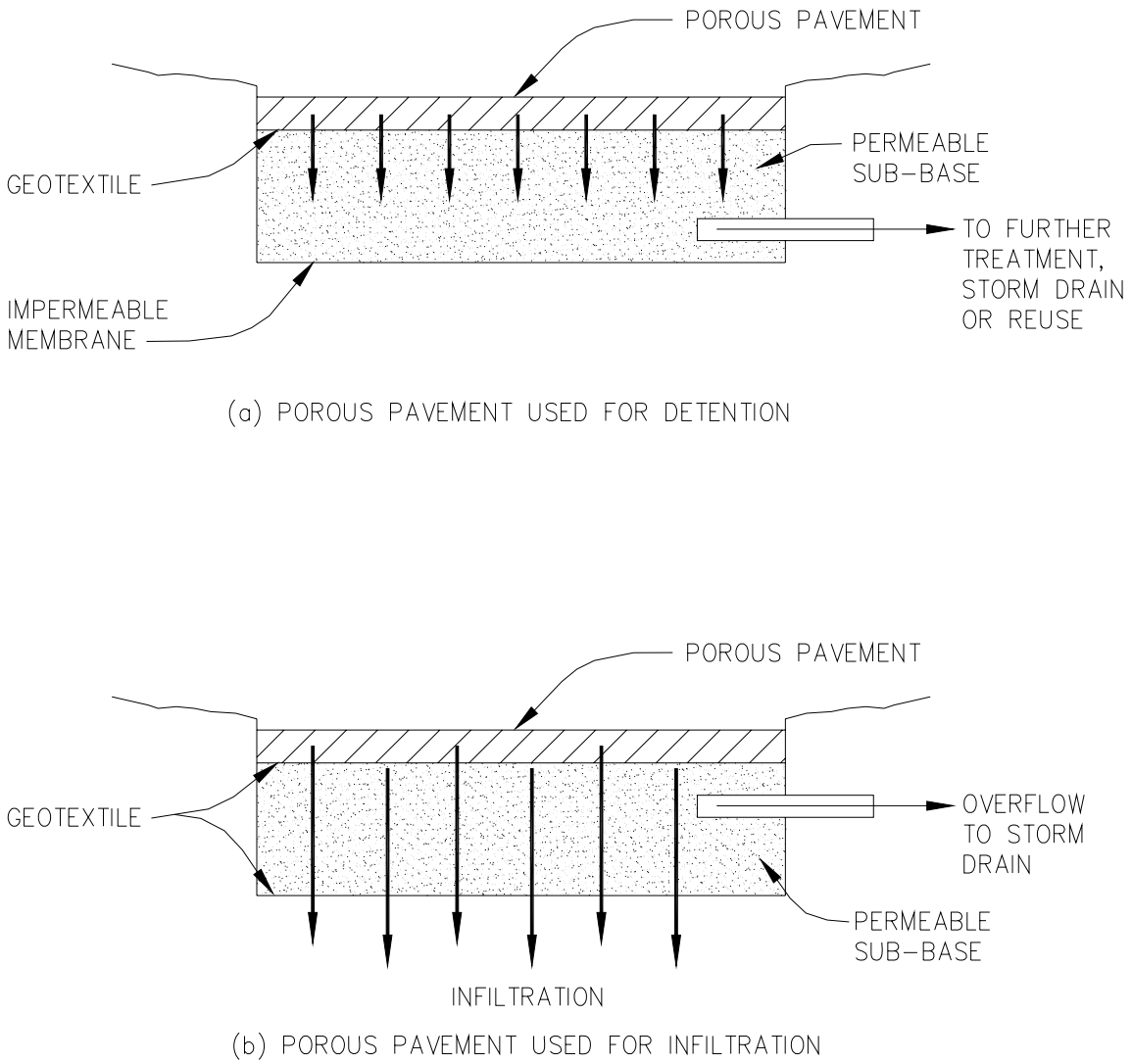

Figure TC-64 C. Typical porous pavement and drainage pipe configurations for a) filtering and detaining storm water runoff and b) filtering and infiltrating storm water runoff (modified from CASQA, 2003).

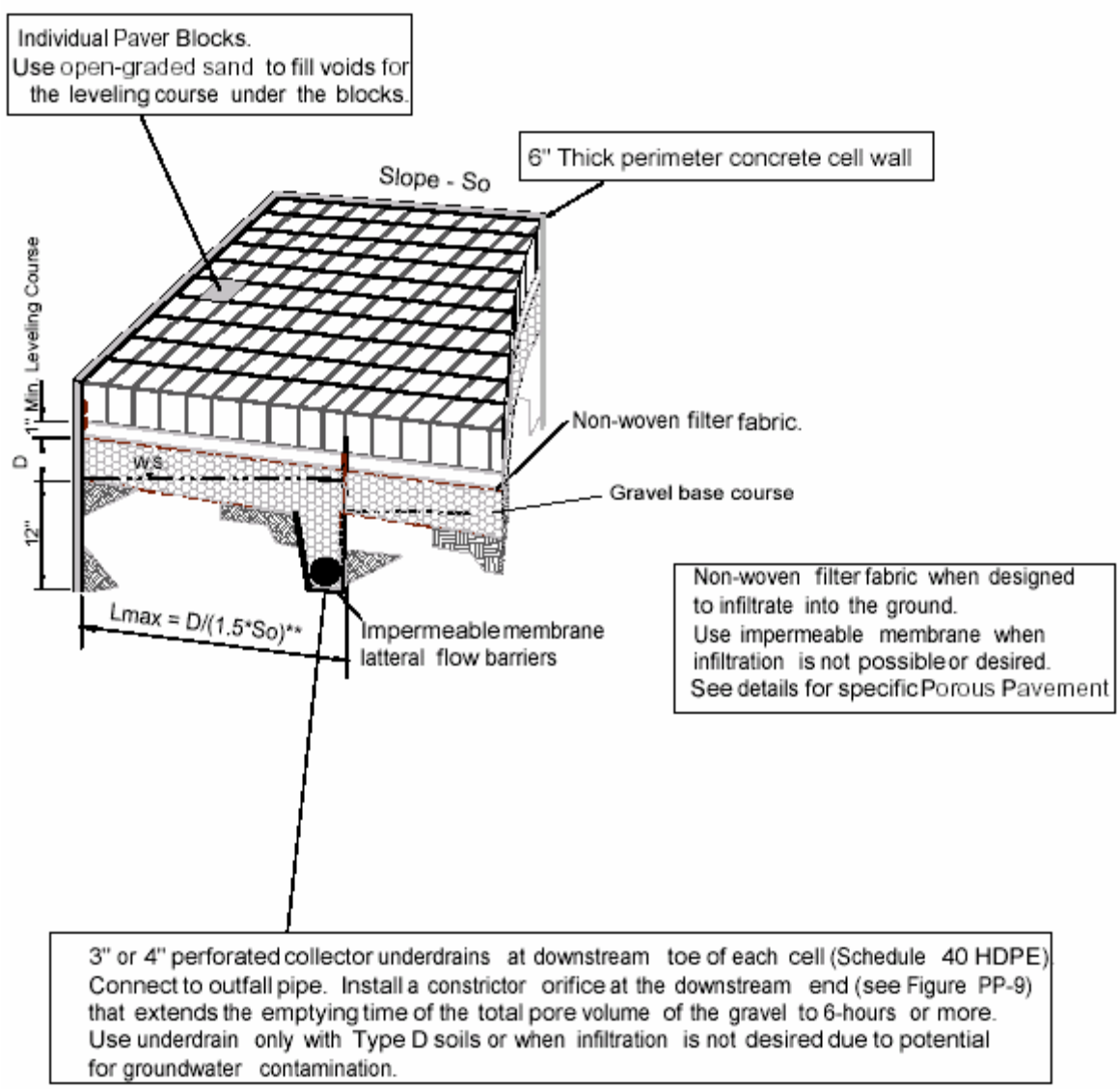

Figure TC-64D. View of a paver block installation showing perimeter wall and contained cells. (modified from UDFCD 2005)

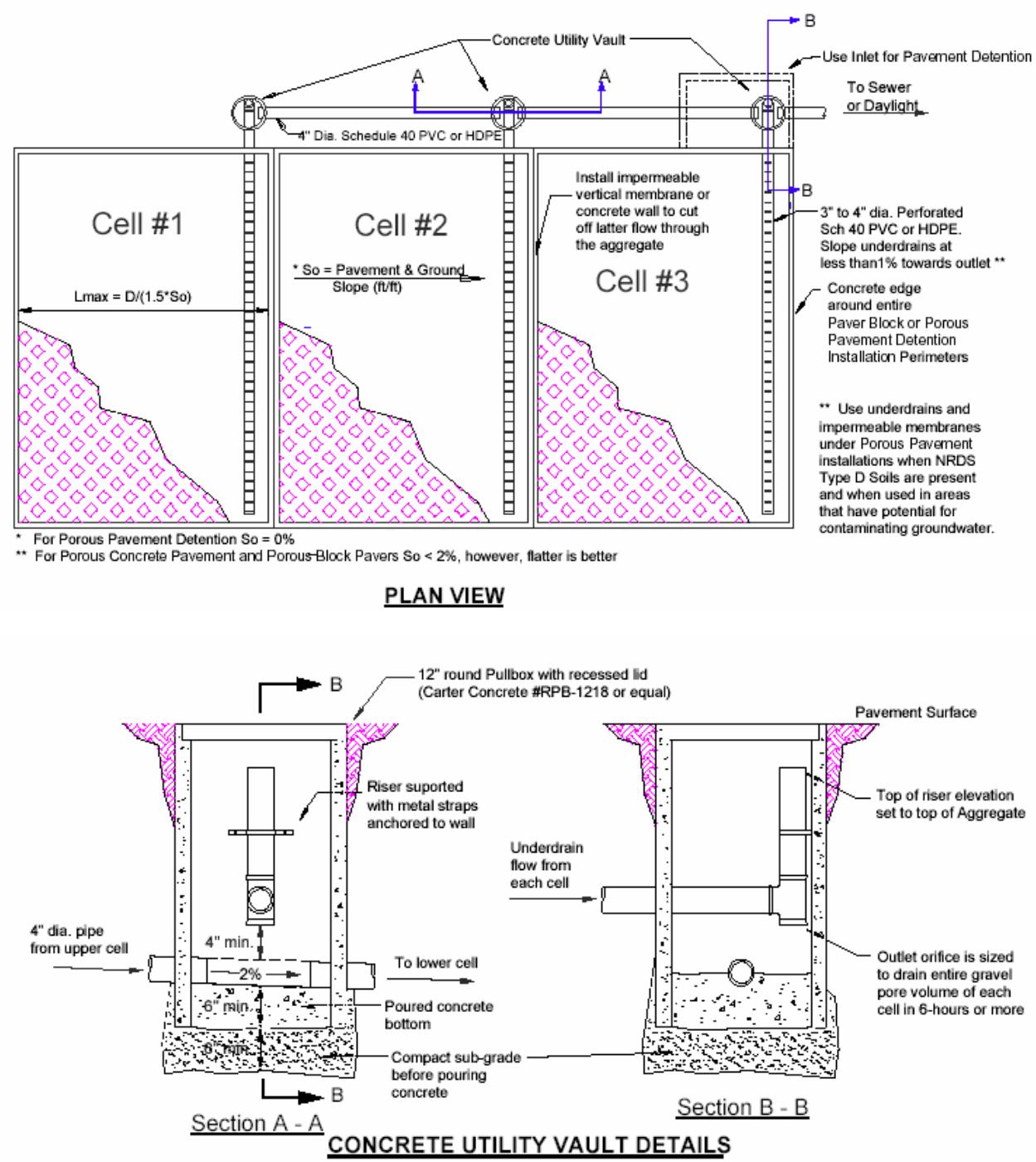

Figure TC-64E. Layout for underdrain system for porous pavement installations. (Modified from UDFCD 2005).

6.8 Oil and Water Separators

These devices typically consist of one or more chambers that promote the settling of coarse sediments and other materials and the separation of free oil from runoff. Some oil and water separators also include screens to retain larger or floating debris. Some also include coalescing plates that help to promote oil and water separation. These devices were originally designed to capture hydrocarbon spills at industrial sites. They are useful as pretreatment devices prior to discharging to other storm water treatment control devices.

OIL AND WATER SEPARATORS TC-70

Description

Oil and water separators are also known as oil/grit separators and water quality inlets. They are typically designed to remove oil and grease and some sediment from storm water. They typically consist of three chambers that promote sedimentation of coarse materials and separation of free oil (as opposed to emulsified or dissolved oil) from storm water. Some oil and water separators contain screens to help retain floating debris. Many newer designs include coalescing plate interceptors that help promote oil/water separation. They are effective at capturing hydrocarbon spills. However, they are less effective at removing metals and nutrients and due to their limited storage capacity and flow through design; they have a limited ability to treat storm water runoff.

Applications and Advantages

Oil and water separators are typically applied at industrial areas where there is a risk of leaks and spills, such as airport aprons, equipment washdown areas, gas stations and loading docks. With regular maintenance, oil and water separators can also be used as pre-treatment systems before discharging to additional structural treatment controls.

Performance Data

Oil and water separators are effective at oil/water separation and recovery and some models can handle flow rates up to 5000 GPM.

Limitations

- Frequent maintenance is required to prevent resuspension and washout of the captured sediments.
- Other than oil/water separation and recovery, oil and water separators provide limited pollutant removal from storm water.
- Oil and water separators cannot be used for the removal of dissolved or emulsified oils such as coolants, soluble lubricants, glycols, and alcohols.
- Standing waters in oil and water separators can provide a mosquito breeding habitat. Prevention is achieved through screening the ventilation pipes and other access points.

Siting Criteria

- Industrial areas where there is a risk of leaks and spills or as a pre-treatment device prior to discharge to another BMP.
- Contributing drainage areas one acre or less are recommended.

Design and Construction Criteria

- Use Design-aid Worksheet TC-70 (www.TMstormwater.com)
- Registered professional civil engineers should design oil and water separators.
- Generally the permanent pool in an oil and water separator should be sized based on a minimum volume of 400 ft^3 per acre of impervious drainage area.

- Sizing of oil and water separators should conform to the manufacturer's recommendations.
- The depth of the sump should be at least four times the diameter of the inflow pipe.
- The outlet should be a minimum of 4 feet below the inlet.
- Vault baffles should be made of concrete, stainless steel, fiberglass reinforced plastic, or another noncorrosive material and should be securely fastened to the vault.
- Maximum allowable velocity through the inlet of the separator should be 0.5 ft/sec.
- Construction activities within the drainage area should be completed prior to installation of oil and water separators.
- Design life is either 50 years or manufacturer's specifications, whichever is less.

Inspection and Maintenance Requirements

- Maintenance is typically required every one to six months.
- Proper disposal of trapped sediment and oil and grease is required.
- In areas where high sediment loading is common, inlets should be inspected and cleaned after every major storm event and should be inspected monthly.
- Proprietary systems may have their own, specific maintenance requirements.
- Where appropriate, confined space entry procedures must be followed.

References

City of Boise, Storm Water Management: A Design Manual pg. 4-7

Minnesota Urban Small Sites BMP Manual, Detention Systems: Oil/Grit Separators
www.metrocouncil.org/environment/Watershed/bmp/CH3_STDetOilGrit.pdf

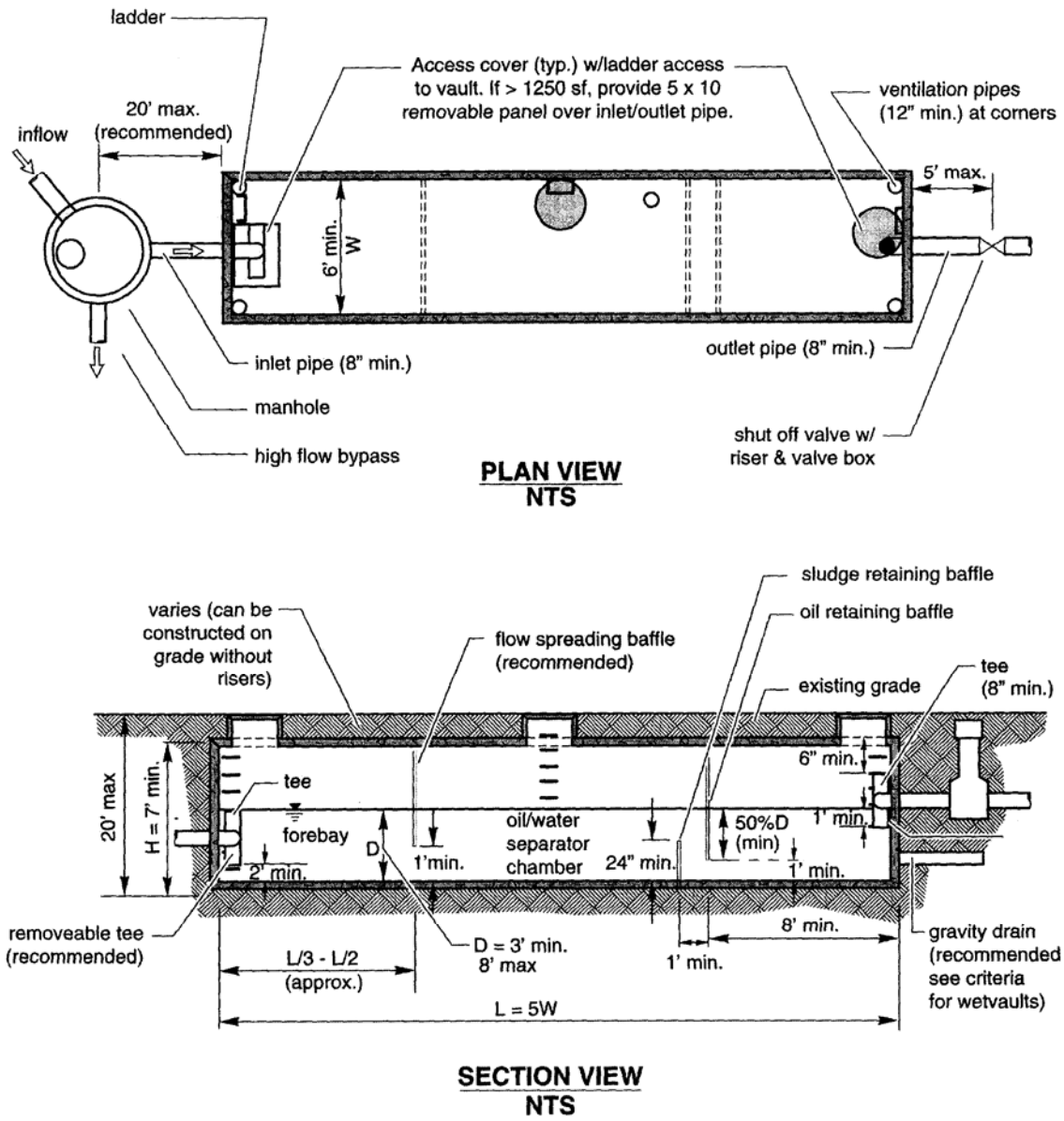

Figure TC-70 A. Example design and structural information for a typical oil and water separator (Source, Washington Department of Ecology, 1999).

Section 7

Manufactured (Proprietary) Treatment Controls

Section 7: Manufactured (Proprietary) Treatment Controls

7.0 Introduction

Manufactured or proprietary treatment controls are commercially available storm water treatment devices that are designed and distributed by private companies. They are often prefabricated and available in a number of sizes depending on the flow rate or volume to be treated. They are also typically designed and sized based on criteria determined by the manufacturer, which often differs from the sizing criteria required by municipalities such as those in the Truckee Meadows. Whenever possible, manufactured treatment controls applied in the Truckee Meadows should be sized based on the criteria for public domain treatment controls presented in Sections 3.2.1 and 3.2.2 of this manual. However, alternative sizing criteria may be acceptable if it is commonly used in other communities and the manufacturer provides performance data that demonstrates acceptable pollutant removal rates.

Manufactured treatment controls can be applied in a wide variety of urban settings, but are often most useful where space is limited. Therefore they can be particularly applicable to retrofit situations. As noted in Section 1.6, the science and technology of storm water quality improvement is evolving and new and innovative structural controls continue to be developed. This is particularly true with manufactured treatment controls. The manufactured treatment controls that are currently available can be broadly grouped into the following categories:

- Hydrodynamic Separators
- Wet Vaults
- Catch Basin Inserts
- Modular Wetlands
- Media Filtration Systems
- Landscape Filtration Systems
- Gross Solids Removal Devices

Note: The manufactured or proprietary treatment controls discussed in this manual are provided only as examples of the types of devices that are currently commercially available. The companies and devices noted do not indicate an endorsement by Truckee Meadows Stormwater Permit Coordinating Committee, the City of Reno, the City of Sparks, Washoe County or the Nevada Department of Transportation.

HYDRODYNAMIC SEPARATORS MTC-10

Description

Hydrodynamic separators (a.k.a. vortex separators or swirl concentrators) are round gravity separators that are increasingly used for storm water treatment. They are designed to remove trash, debris, and some amount of sediment, oil, and grease from urban runoff. They consist of flow-through structures that have a settling or separation unit to remove sediment and other pollutants. The energy of storm water flowing into a hydrodynamic separator is utilized to create centrifugal forces that allow suspended sediment and attached pollutants to move to the center of the device and settle to the bottom. Hydrodynamic separators are best suited for heavy particulates (which settle) or floatables (which can be captured), rather than dissolved solids and pollutants that do not settle. Several examples of commercially available hydrodynamic separators have been provided in figures MTC-10A through MTC-10C.

Applications

Hydrodynamic separators are available in many sizes and are easily added to a new or existing storm drain system. They may achieve a pollution reduction performance similar to wet vaults, but in a smaller space. Their versatility makes them a good option for storm water "hotspots" such as near industrial sites where higher concentrations of pollutants are more likely.

Performance Data

Performance claims differ depending on the manufacturer and the type of separator. However, in general hydrodynamic separators are capable of removing 90% of all particles with a specific gravity of 2.65 (glacial sand) down to 150 microns (CASQA, 2003). They can also effectively capture floatable trash and debris and oil and grease. Proper design and maintenance is necessary for maximum performance.

Limitations

- Will not significantly remove pollutants such as nutrients, which adhere to fine particulates or are dissolved.
- Typically not designed with significant detention storage.
- Units with standing water potentially face problems with mosquito breeding.
- Non-steady flows of storm water decrease the efficiency that is estimated from testing under constant flow.

Siting Criteria

- Hydrodynamic separators can be installed anywhere a standard manhole can be installed. They can be retrofit into many locations including existing manholes.
- The size of the drainage area that can be served is directly related to the capacities of the largest models.
- Individual units can be placed in series to provide treatment for larger flows.

HYDRODYNAMIC SEPARATORS MTC-10

Design and Construction Criteria

- Hydrodynamic separators are often sized based upon the manufacturers design criteria, which can vary significantly. The sizing requirements of hydrodynamic separators should be based on the water quality flow criteria outlined in Section 3.2.1. However, alternative sizing criteria may be acceptable if it is commonly used in other communities and performance data demonstrates acceptable pollutant removal rates.
- Hydrodynamic separators have two capacities, a treatment capacity and a hydraulic capacity. The designer must be certain that the peak flow of the design event matches the stated treatment capacity, not the hydraulic capacity.
- If an in-line facility, the design peak flow (hydraulic capacity) should be four times the treatment capacity.
- If an off-line facility, the design peak flow should be equal to the treatment capacity.
- Head loss differs by product and by model but is generally on the order of one foot or less.
- Native soils must provide adequate bearing strength.
- Cost dependent on the flow rate to be treated, site constraints, source control implementation, and any other treatment technologies that are presently being used.
- Installation costs are generally 30 to 50% of the manufacturer's delivered cost.
- Eliminate access openings for adult mosquitoes.

Inspection and Maintenance Requirements

- For most sites, hydrodynamic separators are cleaned annually.
- Hydrodynamic separators should be inspected twice a year.
- A dipstick can be used to measure sediment level.
- Hydrodynamic separators should be cleaned when collected sediments reach 25% of the storage capacity.
- Cleaning can be accomplished with a sump vac or a vacuum truck.
- Proper disposal of trash, debris, sediment, oil and grease is required.

References and Sources of Additional Information

California Stormwater Quality Association (CASQA), 2003. Stormwater Best Management Practice Handbook, New Development and Redevelopment. http://www.cabmphandbooks.com/Development.asp

Minton, G.R., 2002. Stormwater Treatment, Biological, Chemical & Engineering Principles, Resource Planning Associates, Seattle, Washington.

HYDRODYNAMIC SEPARATORS MTC-10

USEPA, Stormwater Technology Fact Sheet: Hydrodynamic Separators.
www.epa.gov/owm/mtb/hydro.pdf

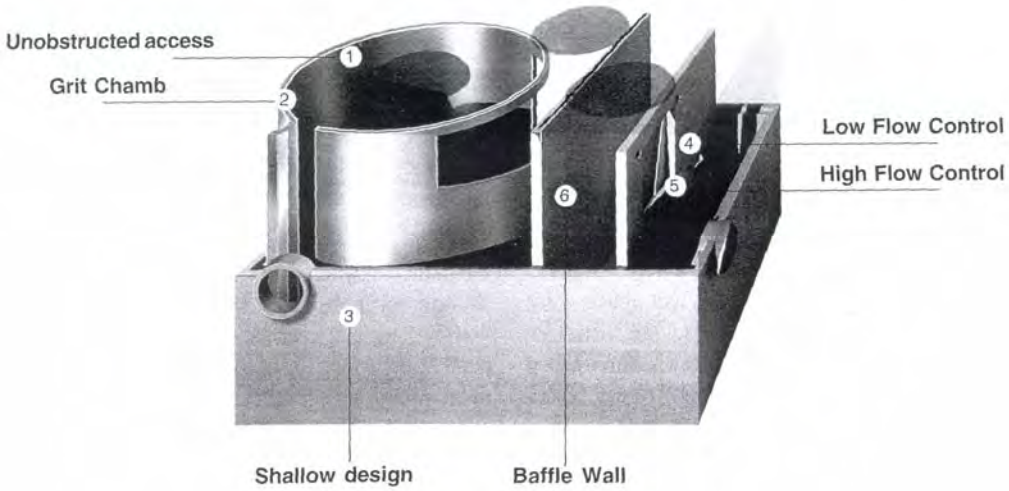

Figure MTC-10A Vortechs System
Graphic provided by Stormwater 360

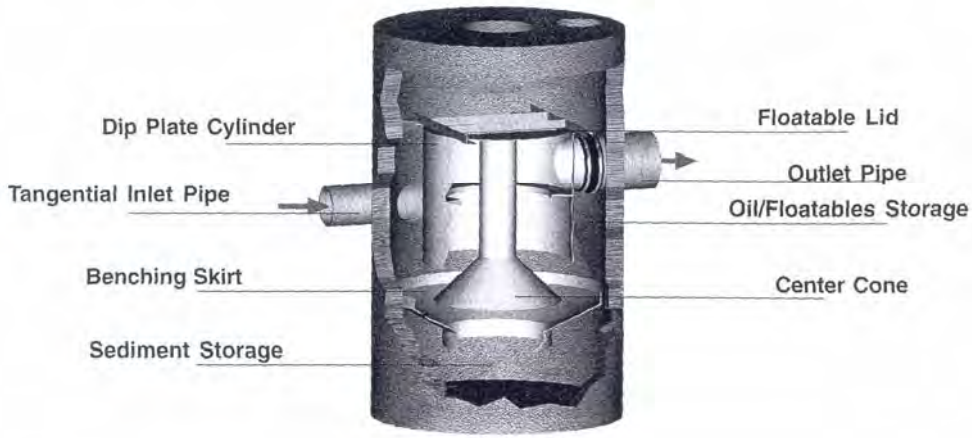

Figure MTC-10B. Downstream Defender™
Graphic provided by Hydro International, Inc.

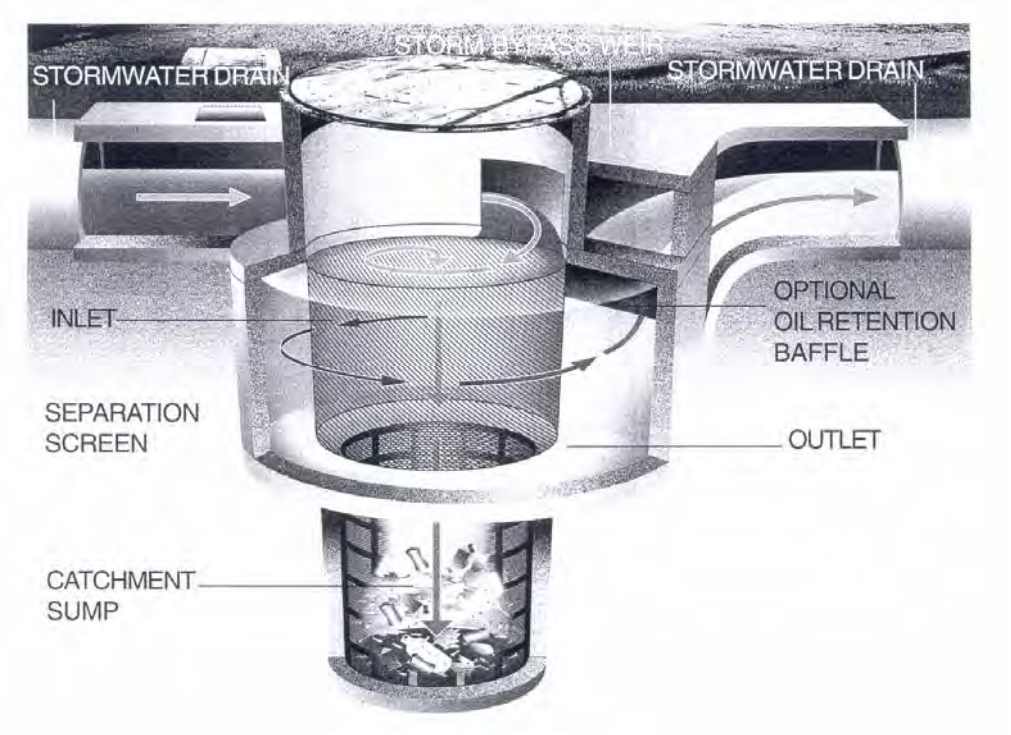

Figure MTC-10C CDS Separator
Graphic provided by CDS Technologies Inc.

WET VAULTS MTC-20

Description

Wet vaults are subterranean structures designed to dissipate the energy of storm water runoff with baffles and chambers and promote the settling of particulate storm water pollutants. They have a permanent pool of water, generally 3 to 5 feet deep. They may also have a constricted outlet that causes a temporary rise in the water level of the pool during storm events. The temporary additional volume of storm water generally drains within 12 to 48 hours after the end of each storm event. Wet vaults are typically used for commercial, industrial, or roadway projects if there are space limitations precluding the use of other treatment BMPs. Manufactured wet vaults generally fall into three classifications.

Type A (Figure MTC-20A) – This system consists of two standard precast manholes that create an upstream (primary) chamber and a downstream (storage) chamber. The manholes are sized to capture a desired treatment volume. Storm water runoff enters the primary chamber where coarse-grained solids settle and collect. Storm water then flows to the storage chamber carrying floatable debris and trash where they are captured and retained. Further sedimentation occurs in the storage chamber and flows in excess of the design treatment flow rate are bypassed around the storage chamber to the storm drain system. The storage chamber serves as an off-line reservoir for floatables and finer-grained sediments and storm water flows through it at flow rates less that the design treatment flow rate of the device. The bypass prevents the resuspension of sediments that have accumulated in the storage chamber. The manufacturer currently provides 5 models with treatment flow rates ranging from 1.1 to 21.8 cfs. The hydraulic capacities of the 5 models range from 8.5 to 100 cfs, respectively. Customized sizes are also available from the manufacturer that can handle higher flow rates than the design capacity of the standard models.

Type B (Figures MTC-20B) – This system appears similar to a standard rectangular wet vault; however there are significant internal design differences. A series of baffles attached to the top and bottom function to reduce energy, aid in sedimentation and reduce the resuspension of collected sediments. The vault includes a permanent pool and a constricted outlet that causes a temporary rise in the water level of the pool during storm events. The system consists of standard modular units that can be configured to provide the desired treatment volume. Floating absorbent pads can also be added for oil and grease.

Type C (Figure MTC-20C) – This style of wet vault consists of one circular structure that can be constructed of a standard precast manhole. Larger drainage areas require the use of larger non-standard size manholes. A proprietary internal bypass weir structure routes all storm water flows up to the bypass rate into a center well where sedimentation occurs. Flows in excess of the treatment flow rate are diverted directly across the top of the center well and over the bypass weir to the storm drain system. These systems are best suited for drainages under 10 acres. The manufacturer provides the capacity and efficiency of these systems. Dimensions vary to accommodate a 24” storm drain pipe with a holding capacity of 470 gallons to a 60” storm drain pipe with a holding capacity of 15,918 gallons.

WET VAULTS MTC-20

Applications

Wet vaults are typically used for commercial, industrial, or roadway projects where space constraints limit the use of other treatment controls.

Performance Data

The targeted constituents of wet vaults are sediment, nutrients, trash, metals, oil and grease, and organics. Manufactured wet vaults can be expected to perform similarly to Storm Water Ponds (TC-50) as long as the design features are effective at preventing the resuspension of collected sediments. However, there are not sufficient data indicating the incremental benefit of the particular design elements of each manufactured product.

Limitations

- Can be considerably more expensive than many other BMPs. However, the added cost may be offset by the value of continued use of the land surface.
- Wet vaults are believed to be ineffective in removing dissolved pollutants such as soluble phosphorus or metals such as copper.
- As sediment fills the storage chamber of wet vaults, treatment efficiencies decline.
- There is some concern that oxygen levels in wet vaults may decline in warm summer months, because of limited contact with air and wind. However, the extent to which this potential problem occurs has not been documented.
- Maintenance of wet vaults can require special equipment.
- No biological activity to increase storm water treatment.
- Accumulated sediment and stagnant conditions may cause noxious gases to form and accumulate in the vault if regular maintenance is neglected.
- Standing water may create a mosquito-breeding habitat.
- The area served is limited by the capacity of the specific models.
- A loss of dissolved pollutants may occur as accumulated organic matter (e.g., leaves) decomposes in the units.

Siting Criteria

- There are no unique siting criteria. The size of the drainage area that can be served by a manufactured wet vault is directly related to the capacities of the specific models and individual site constraints.

WET VAULTS MTC-20

Design and Construction Criteria

- Depending on the particular unit, it should be sized to convey the WQ_F or detain the WQ_V as outlined in Sections 3.2.1 and 3.2.2, respectively. However, alternative sizing criteria may be acceptable if it is commonly used in other communities and performance data is available that demonstrates acceptable pollutant removal rates.
- Wet vaults designed to treat the WQ_V should have a permanent pool with a capacity equivalent to the WQ_V and additional capacity equivalent to $2WQ_V$.
- Minimum of 3000 psi structural reinforced concrete. All construction joints must be provided with water stops. Pre-cast vaults should be designed by a structural engineer.
- All vault access openings should have round, solid, locking lids using 1/2-inch diameter allen head screw locks.
- Cost dependent on the volume to be treated, site constraints, and any source or treatment controls used within the drainage area.
- Installation costs are generally 50 to 100% of the manufacturers delivered cost.
- Native soils must provide adequate bearing strength.
- Eliminate access openings for adult mosquitoes.

Inspection and Maintenance Requirements

- Recommended cleaning rates differ depending on the manufacturer and the land uses of the drainage area being treated. However, for most sites, wet vaults should be cleaned annually.
- Wet vaults should be inspected twice a year.
- A dipstick can be used to measure sediment level.
- Units should be cleaned when sediment reaches 25% of the vault storage capacity.
- Cleaning can be accomplished with a sump vac or a vacuum truck.
- Proper disposal of trapped sediment and oil and grease is required.
- Internal wet vault maintenance or repairs must meet OSHA confined space entry requirements.

References and Sources of Additional Information

California Stormwater Quality Association (CASQA), 2003. Stormwater Best Management Practice Handbook, New Development and Redevelopment. http://www.cabmphandbooks.com/Development.asp

Idaho Department of Environmental Quality, 2001. Catalog of Stormwater Best Management Practices: For Idaho Cities and Counties. BMP #51 – Wet Vault/Tank. http://www.deq.state.id.us/Water/stormwater_catalog/doc_bmp51.asp

Minton, G.R., 2002. Stormwater Treatment, Biological, Chemical & Engineering Principles, Resource Planning Associates, Seattle, Washington.

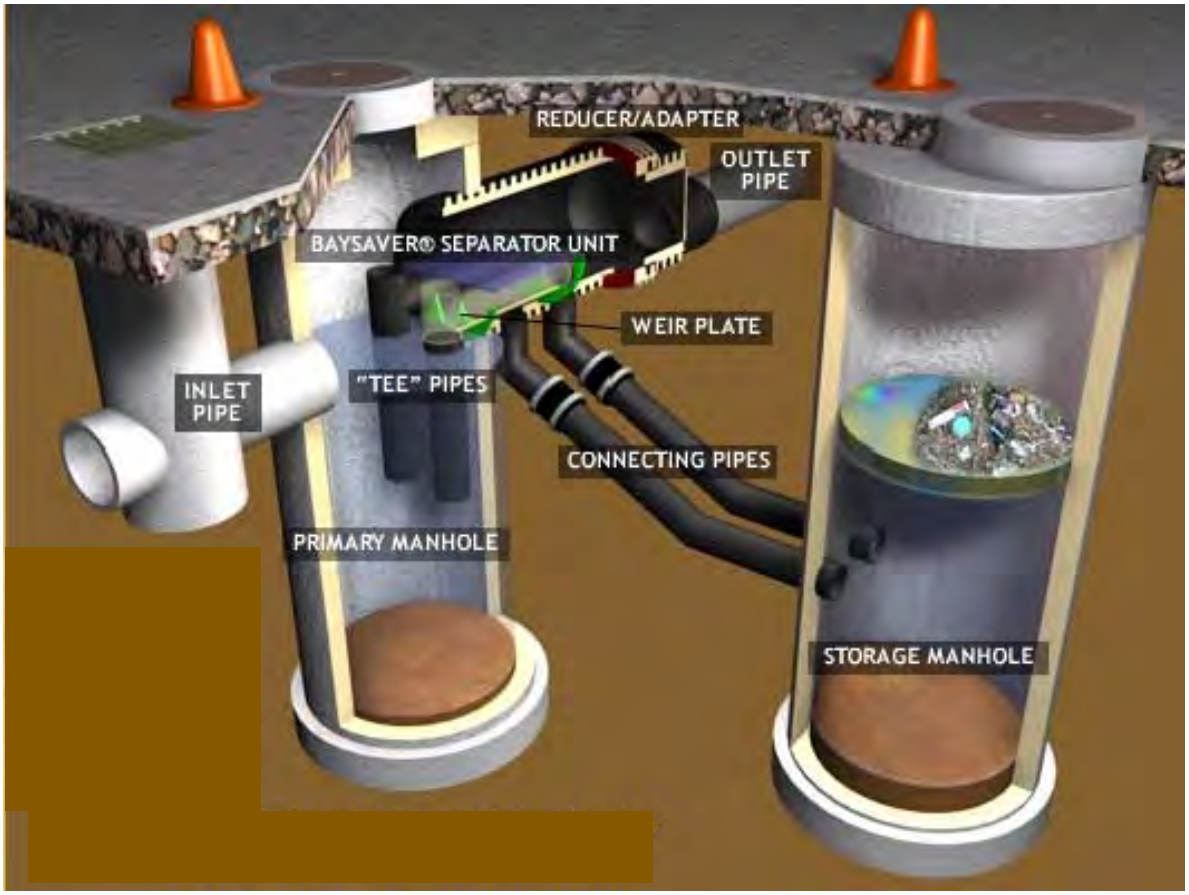

Figure MTC-20A. Type A System - BaySaver™
Graphic provided by BaySaver, Inc.

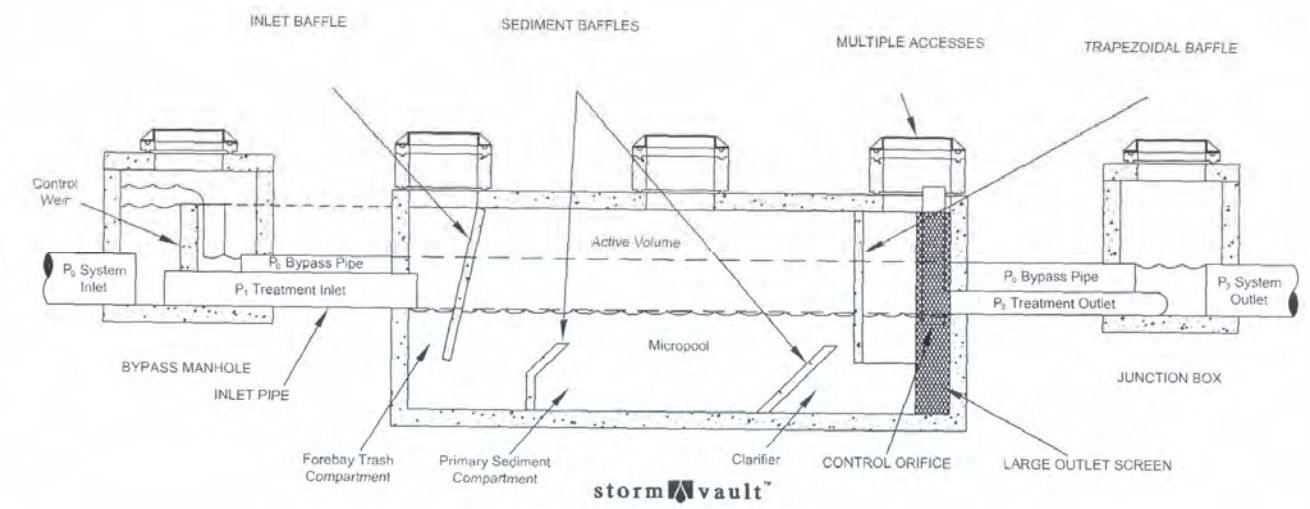

Figure MTC-20B. Type B System - Jensen StormVault™
Graphic provided by Jensen Precast, Inc.

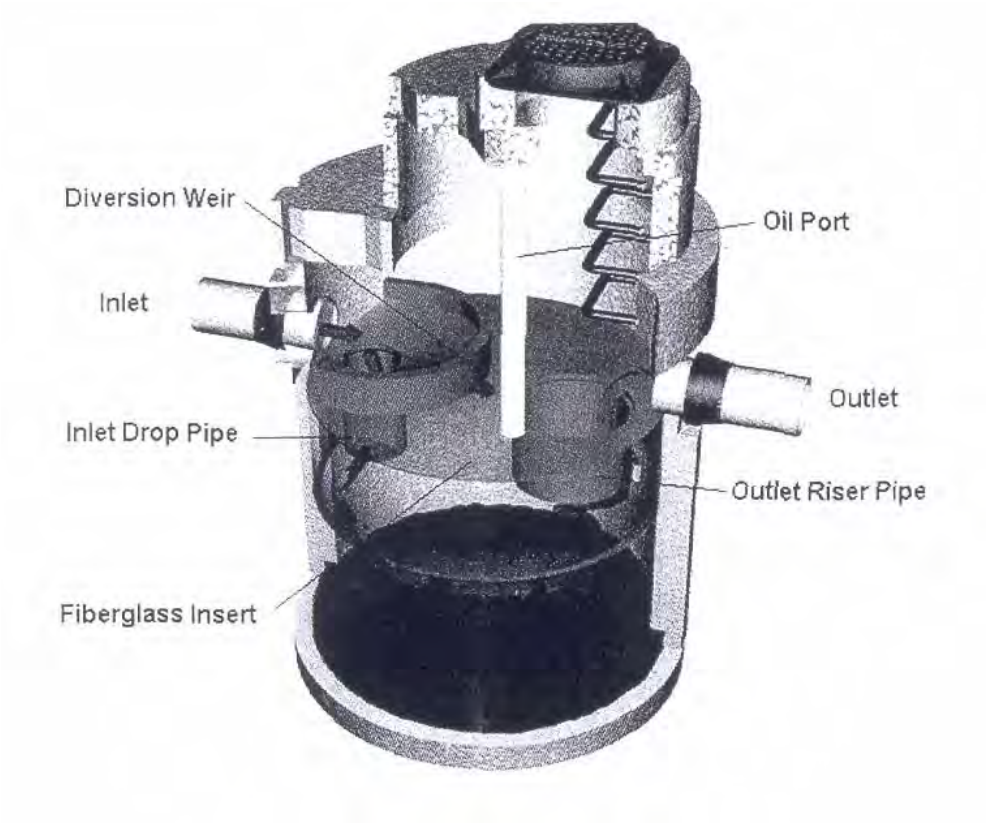

Figure MTC-20C. Type C System - Stormceptor®
Graphic provided by Rinker Materials, Inc.

CATCH BASIN INSERTS MTC-30

Description

Catch basin inserts (a.k.a. drain inserts) are manufactured filters placed in drop inlets to help remove sediment and debris from storm water runoff. They are used to increase a catch basin's efficiency at removing trash, debris and sediment and some oil and grease, organics, and metals. There are many varieties of catch basin inserts, however, they typically fall into one of three main types: trays, boxes or socks. The tray insert option consists of a series of trays, with the top tray serving as an initial sediment trap. Underlying trays often contain filters composed of a variety of different types of media including polypropylene, porous polymers, treated cellulose, and activated carbon. The box option is typically constructed of plastic or wire mesh with filtering medium that fits directly into the box within the catch basin. Hydrocarbons are removed as the storm water passes through the adsorbent filters while trash, debris and sediment remains in the box as the storm water exits. Both tray and box type catch basin inserts typically provide overflow features and reportedly do not reduce the original hydraulic capacity of the catch basin. The sock option uses filter fabric (usually polypropylene) to remove pollutants from vertical drop inlets. The fabric is either attached to a frame or directly to the catch basin grate. Each of these options provides very little volume; therefore frequent sediment removal and maintenance is required. Some models allow for sediment removal with a vacuum truck while others require physically removing the insert for cleaning.

Applications

Catch basin inserts are typically used for retrofit applications. They can also be used as a pretreatment device for other manufactured treatment controls. They do not require additional space, can be easily accessed for inspection and maintenance, and do not provide standing water for the breeding of mosquitoes.

Performance Data

Few manufacturers have collected performance data under field conditions. The University of California, Los Angeles has tested "Ultra-Urban" brand filters in low flow situations. The results of these tests indicate up to 80 percent removal rate of the petroleum hydrocarbons. The captured oil is then permanently bonded within the "Smart Sponge", which eliminates leaching.

Limitations

- Typically require maintenance several times per year.
- May reduce the hydraulic capacity of a catch basin, particularly when full of debris.
- Performance is likely significantly less than other available treatment systems such as ponds and vaults.
- Usually not suitable for large areas or areas with trash or leaves that can plug the insert.
- Studies have found that a variety of inserts showed little removal of total suspended solids (TSS), partially due to scouring and resuspension from relatively small (6-month) storm events.

- Some options require extensive maintenance to prevent build up of sediment while others allow sediment removal with a vacuum system.
- The relative low cost of inserts ($100 to $2,000) may tend to favor the use of these systems over other, more effective treatment controls. However, the initial cost savings may be offset by the number of units required, the costs associated with frequent maintenance, and replacement requirements due to shorter structural life spans.

Siting Criteria

- Can be installed in new or existing catch basins.
- Drainage area for each catch basin insert should be less than 10 acres.

Design and Construction Criteria

- The diameter of the catch basin should be equal to 4 times the diameter of the outlet pipe.
- Refer to manufacturer's guidelines; there are many options to choose from depending on individual site needs.
- Installation should be done in a manner that ensures that runoff enters the unit and does not leak around the perimeter. Leakage between the frame of the insert and the grate of the catch basin can easily occur with vertical drop inlets.

Inspection and Maintenance Requirements

- Inspect several times during the first year to establish cleaning frequencies.
- At a minimum, inserts should be cleaned or replaced once or twice per year.
- Removal of sediment in catch basins may require a vactor truck.
- Many brands of inserts can be serviced in ten minutes or less.
- "Ultra Urban" brand filters recommend replacement of filter box every 1-3 years.

References and Sources of Additional Information

California Stormwater Quality Association (CASQA), 2003. Stormwater Best Management Practice Handbook, New Development and Redevelopment. http://www.cabmphandbooks.com/Development.asp

USEPA, National Pollutant Discharge Elimination System (NPDES). Post-Construction Stormwater Management in New Development & Redevelopment. Catch Basin/Catch Basin Insert. http://cfpub.epa.gov/npdes/stormwater/menuofbmps/post_7.cfm

USEPA, Region 1: New England. AbTech Ultra-Urban™ Filter With OARS® Onboard, http://www.epa.gov/region01/assistance/ceitts/stormwater/techs/abtechfilter.html

USEPA, Region 1: New England. Aqua-Guard™ Catch Basin Insert,
http://www.epa.gov/NE/steward/ceitts/stormwater/techs/aquaguard.html

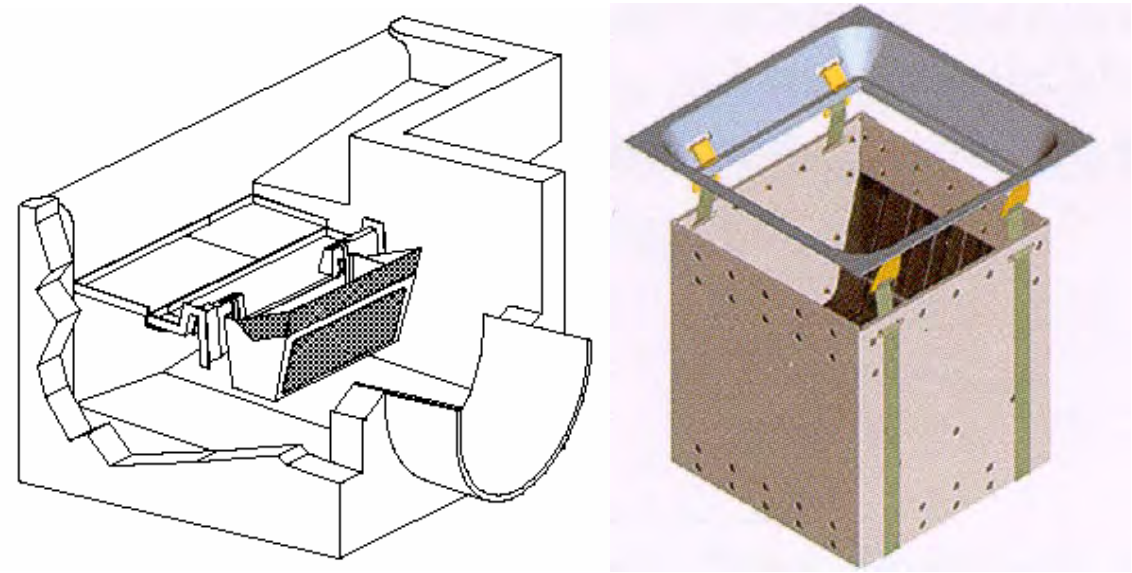

Figure MTC-30A. Examples of a basket type insert for a curb inlet catch basin and a box type insert for a vertical drop inlet (Graphics provided by Bio Clean Environmental Services, Inc. and Abtech Industries™, respectively).

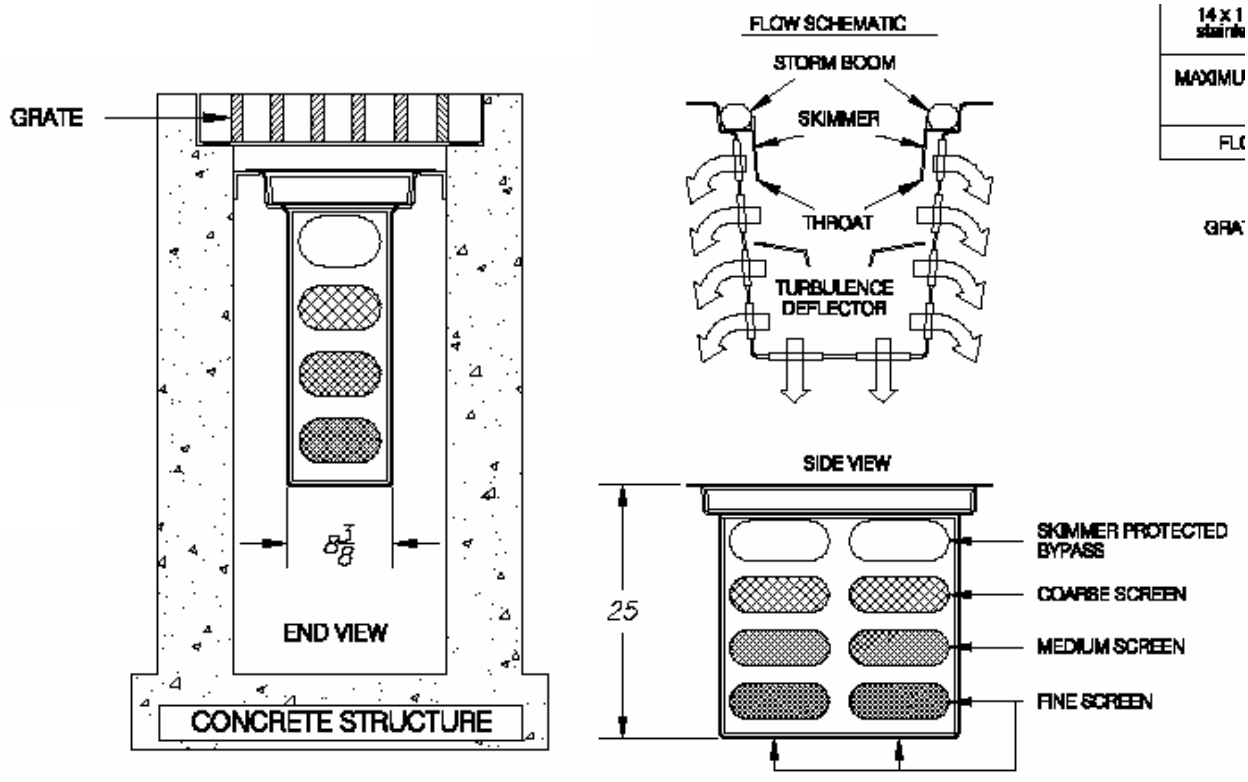

Figure MTC-30B. Example of a box type catch basin insert (Graphic provided by Bio Clean Environmental Services, Inc.).

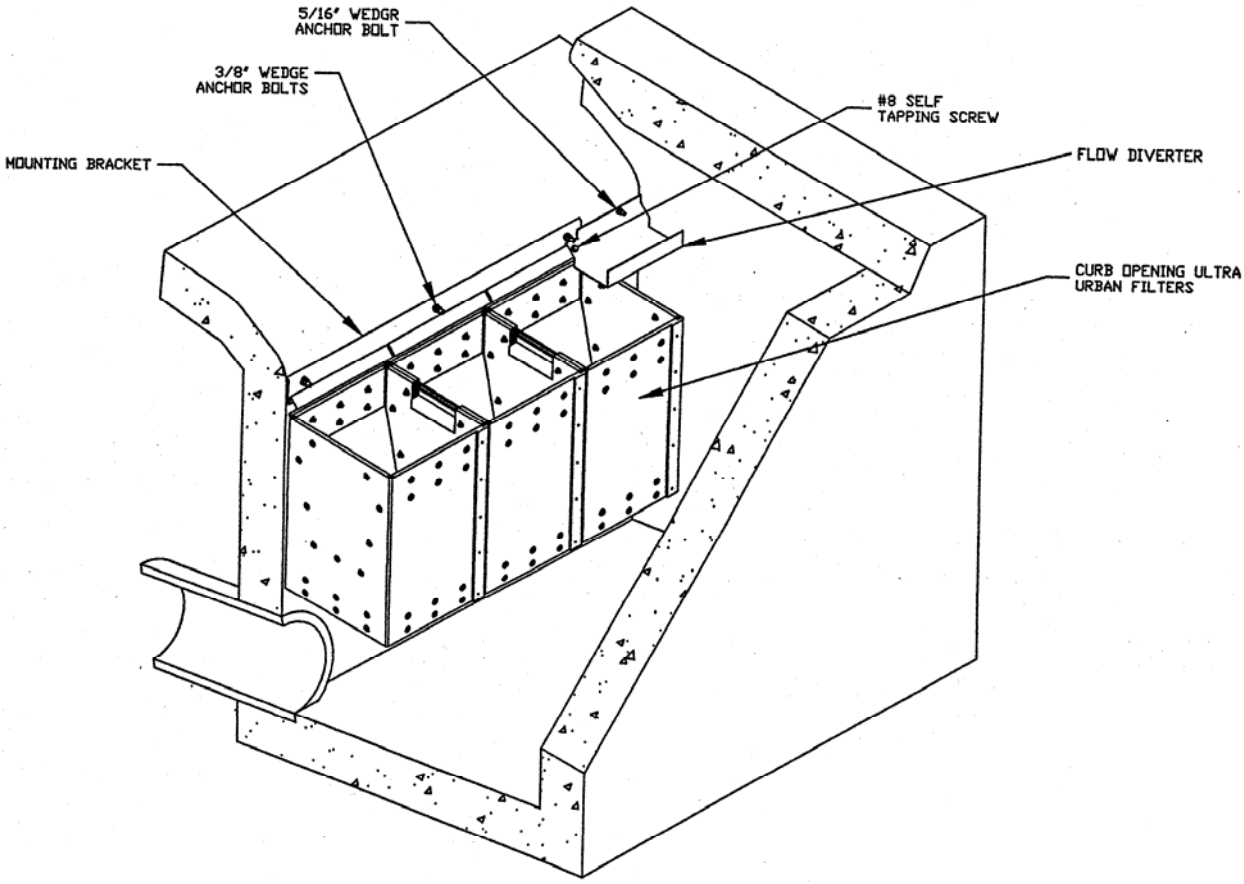

Figure MTC-30C. Example of a box type insert for a curb inlet catch basin (Graphic provided by Abtech Industries™).

MODULAR WETLANDS MTC-40

Description

Modular wetlands, or manufactured wetlands, consist of a two concentric chambers that circulate storm water for an extended period of time to allow for contact and interaction with wetland vegetation. The inner chamber is a closed storage tank and the outer chamber is filled with fine gravel and wetland vegetation such as cattails, reeds, and rushes. Storm water enters the center tank, moving in a circular motion around the tank, and then flows into the outer chamber via floating skimmers. A subsurface flow of storm water is routed through the gravel and wetland vegetation root system allowing for microbial utilization and plant uptake of pollutants. Pretreatment with an upstream treatment control can be added to remove litter, debris and coarse sediment loads. Supplemental media including activated carbon, iron wool and zeolite can also be added to increase pollutant removal efficiency. Modular wetlands are reportedly effective at removing dissolved and suspended solids, nutrients, pesticides, heavy metals and bacteria from urban runoff.

Applications

Can be used to treat runoff from parking lots, buildings, roadways, and residential properties where discharge into a sensitive water body is a concern. Pollutant removal and treatment efficiency improves as contact time increases. Some models are equipped with a spill contamination feature that can capture an upstream release and lessen the spill impact on the environment.

Performance Data

High removal efficiency of TSS, nutrients, pesticides, total metals, petroleum hydrocarbons, and microbiological materials can be expected. Removal of BOD and TDS is considered moderate, while low removal of dissolved metals is associated with modular wetlands.

Limitations

- Typically limited to drainage areas less than one acre.
- Larger drainage areas require numerous units to treat runoff and may take up valuable land surface space.
- Requires a perennial water source to maintain wetland vegetation.
- May create a mosquito breeding habitat if water ponds above the surface of the gravel for more than seven days.
- If litter, debris and coarse sediment loads are not removed with an upstream pretreatment device, clogging of the debris bag may occur.
- Wetland vegetation requires annual maintenance.

MODULAR WETLANDS MTC-40

Siting Criteria

- Modular wetlands require sufficient land surface space.
- Can be used to treat runoff from highways, parking lots, airports, marinas, and commercial, industrial, and residential areas. Requires relatively small drainage areas.

Design and Construction Criteria

- Modular wetland should be sized to capture and treat the WQ_V as outlined in Section 3.2.2. However, alternative sizing criteria may be acceptable if it is commonly used in other communities and performance data is available that demonstrates acceptable pollutant removal rates.
- Excavation depth of over 5 ft is typical.
- Refer to the manufacturer's specifications for additional design and construction criteria.
- Installation costs are generally 50 to 100% of the manufacturer's delivered cost.

Inspection and Maintenance Requirements

- Inspect periodically and remove any invasive wetland plant species.
- Inspect periodically to prevent water ponding standing longer than 7 days.
- Annual inspection and replacement of grit filter bag is required.
- Wetland vegetation should be harvested once a year during mid-summer before plants transfer phosphorus and metals from aboveground foliage to subsurface roots.
- The entire plant mass (foliage and roots) should be harvested and replaced every three to five years.
- Sediment should be removed from the center tank every three to five years.
- A vacuum truck or a septic tank service truck can conduct sediment removal.

References and Sources of Additional Information

California Stormwater Quality Association (CASQA), 2003. California Stormwater Best Management Practice Handbook, New Development and Redevelopment. http://www.cabmphandbooks.com/Development.asp

James Payton's Construction Wetlands Page, 1996. Constructed Wetlands. www.eng.auburn.edu/users/paytojd/wetland.html

Minton, G.R., 2002. Stormwater Treatment, Biological, Chemical & Engineering Principles, Resource Planning Associates, Seattle, Washington.

State of California - Department of Transportation, 2003. Caltrans New Technology Report. p. B-62.

MODULAR WETLANDS MTC-40

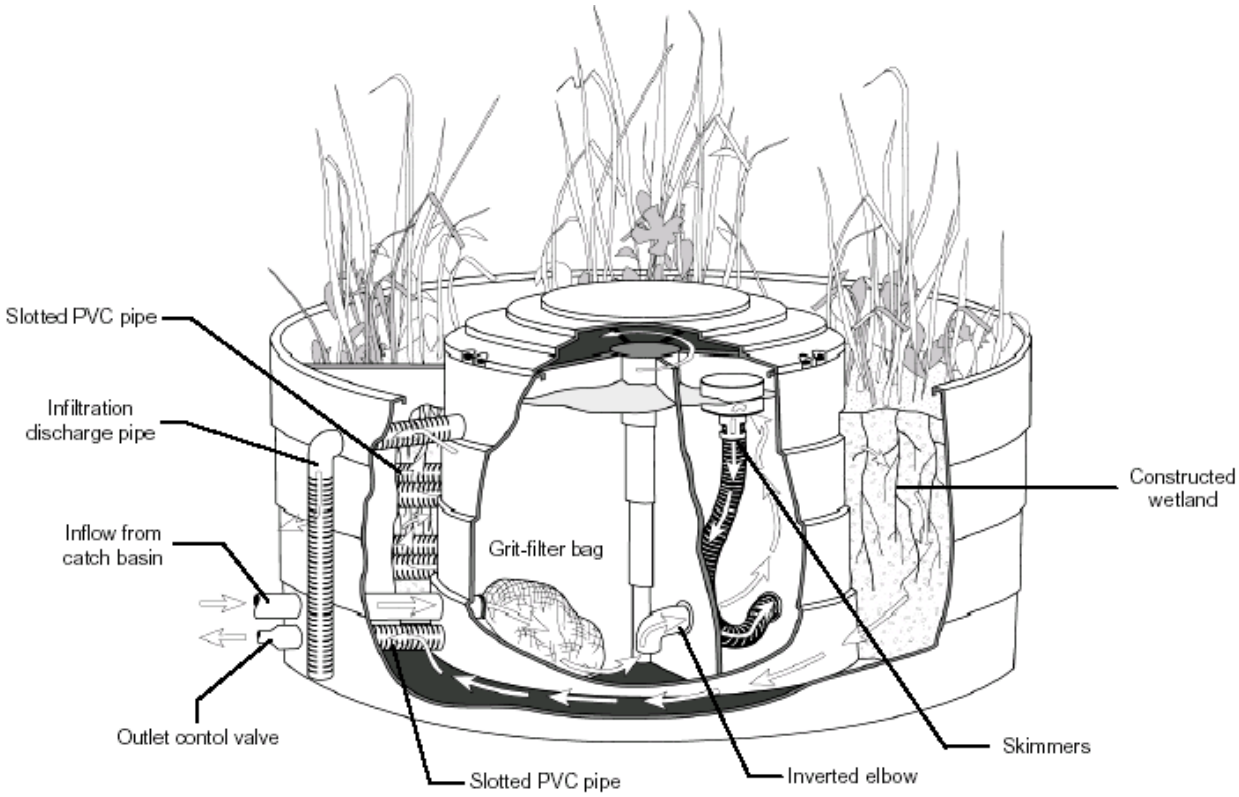

Figure MTC-40. Example of a modular wetland (Graphic provided by StormTreat™ Systems).

MEDIA FILTRATION SYSTEMS MTC-50

Description

Manufactured media filters are typically subsurface BMPs consisting of two chambers that include a pretreatment settling basin and a basin with a sand filter or an absorptive filter media. Large particles and floatables are typically removed in the first chamber while finer grained particles and other pollutants are removed by the filtering media in the second chamber. Overflow weirs are typically incorporated to allow higher flows from larger storm events to bypass the device and flow directly into the storm drain system.

Applications

Manufactured media filters are typically used for commercial, industrial or roadway projects where space constraints limit the use of other treatment controls.

Performance Data

Manufactured media filters can be expected to have similar pollutant removal efficiencies to public domain media filters (TC-60 and 61). Removal of dissolved constituents depends on the type of media used in the device. Filters with perlite and filter fabric are not effective at removal of dissolved constituents, whereas filters with zeolites, activated carbon, compost and peat are.

Limitations

- Some manufactured media filters have reduced pollutant removal efficiencies at higher flow rates.
- Use in drainage areas with high sediment loads can lead to premature clogging.
- Filter replacement may require confined space entry.
- Standing waters in the device may provide mosquito habitat.

Siting Criteria

- Can be placed under roadways, parking lots, sidewalks or landscaped areas and can treat drainage areas of up to 5 acres (depending on the manufacturer and model).
- Issues of buoyancy must be considered in areas with high groundwater tables.
- Do not install in drainage areas with highly erodible or unstable soils.

Design and Construction Criteria

- Media filtration systems should be sized to capture and treat the WQ_V as outlined in Section 3.2.2. However, alternative sizing criteria may be acceptable if it is commonly used in other communities and performance data is available that demonstrates acceptable pollutant removal rates.
- The porosity of the filler media must be considered when sizing.

- Detention times of 4 to 6 hours are common. Increased detention time will increase pollutant removal effectiveness.
- May be used on sites with impermeable soils since the runoff filters through filter media, not native soils.
- The main factors that influence removal rates are the storage volume, filter media, and detention time.
- Refer to the manufacturer's specifications for additional design and construction criteria.
- Installation costs are generally 30 to 50% of the manufacturer's delivered cost.

Inspection and Maintenance Requirements

- Inspect several times during the first year to establish loading and cleaning frequencies.
- Media filtration systems are typically cleaned once a year.

References and Sources of Additional Information

California Stormwater Quality Association (CASQA), 2003. California Stormwater Best Management Practice Handbook, New Development and Redevelopment. http://www.cabmphandbooks.com/Development.asp

MEDIA FILTRATION SYSTEMS MTC-50

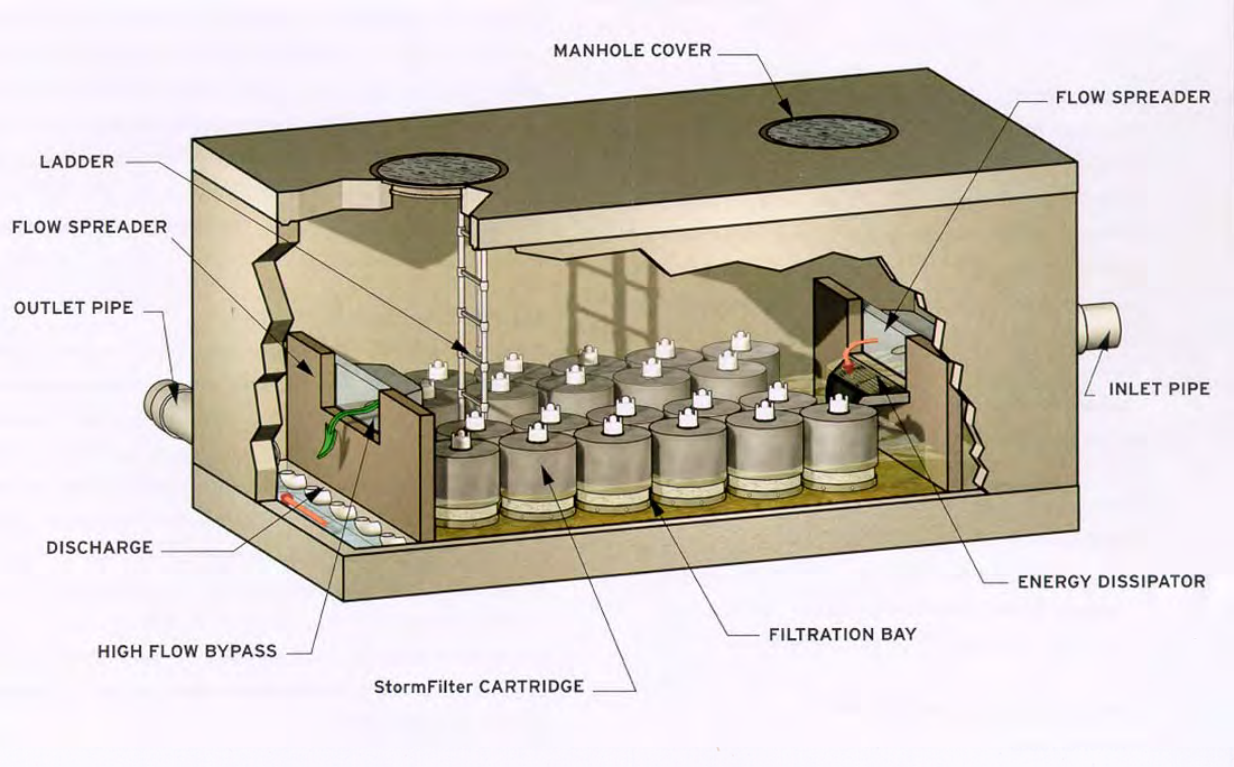

Figure MTC-50A. Example of a vault type media filtration system (Graphic provided by Stormwater 360).

MEDIA FILTRATION SYSTEMS MTC-50

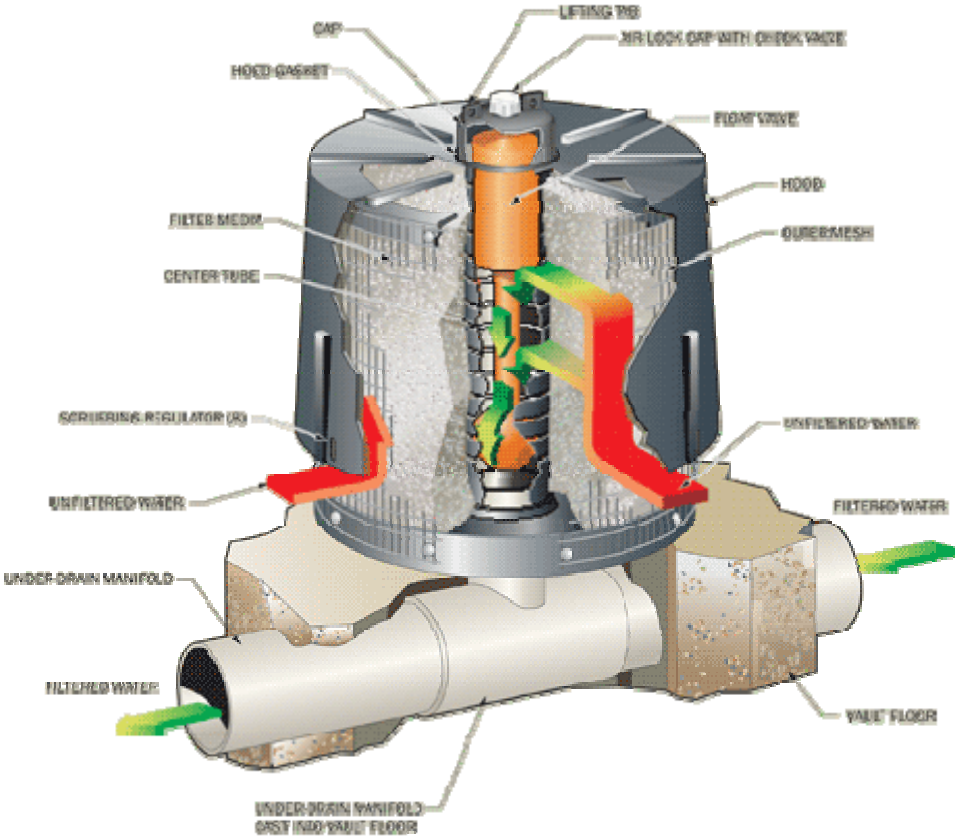

Figure MTC-50B. Example of a media filter cartridge (Graphic provided by Stormwater 360)

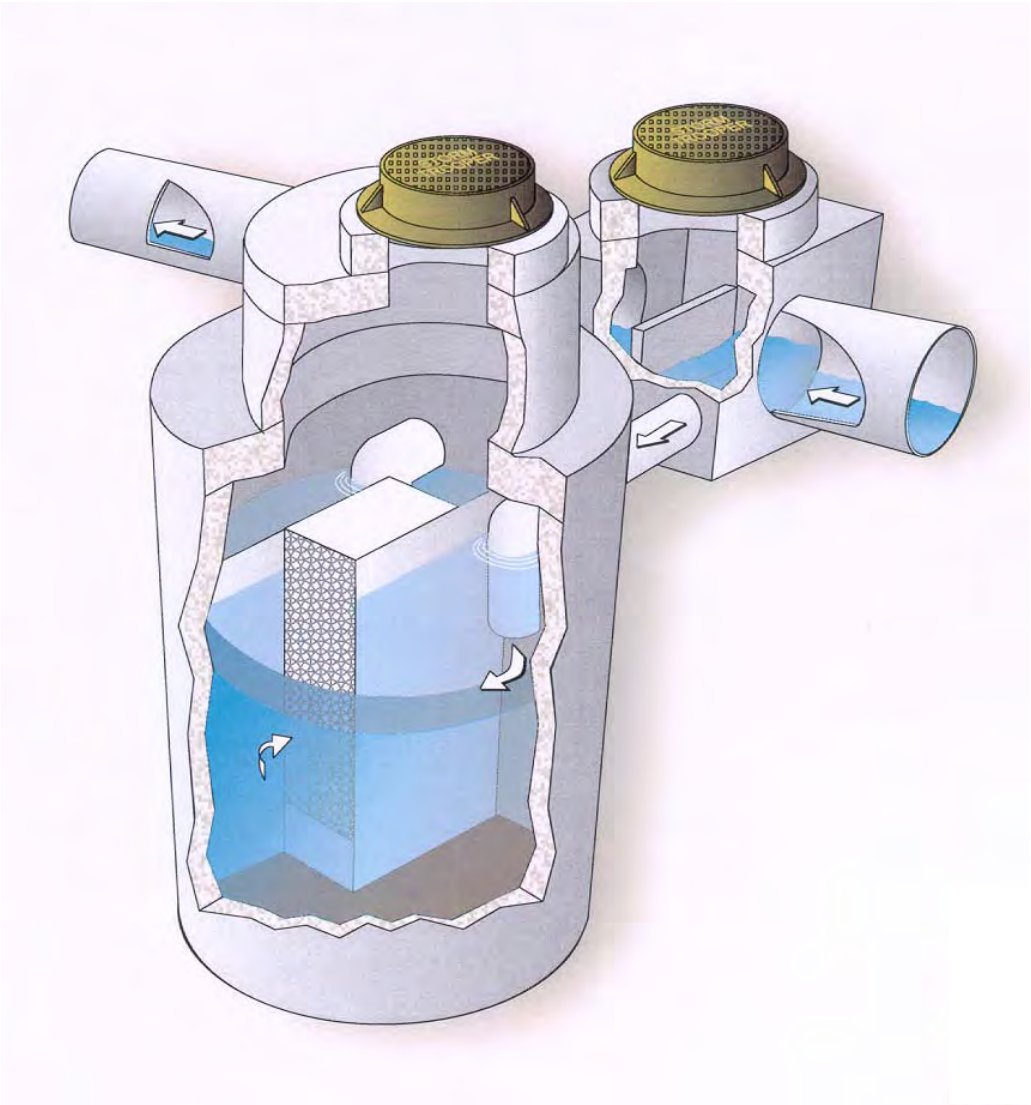

Figure MTC-50C. Example of a manhole media filtration system (Graphic provided by Park Environmental Equipment)

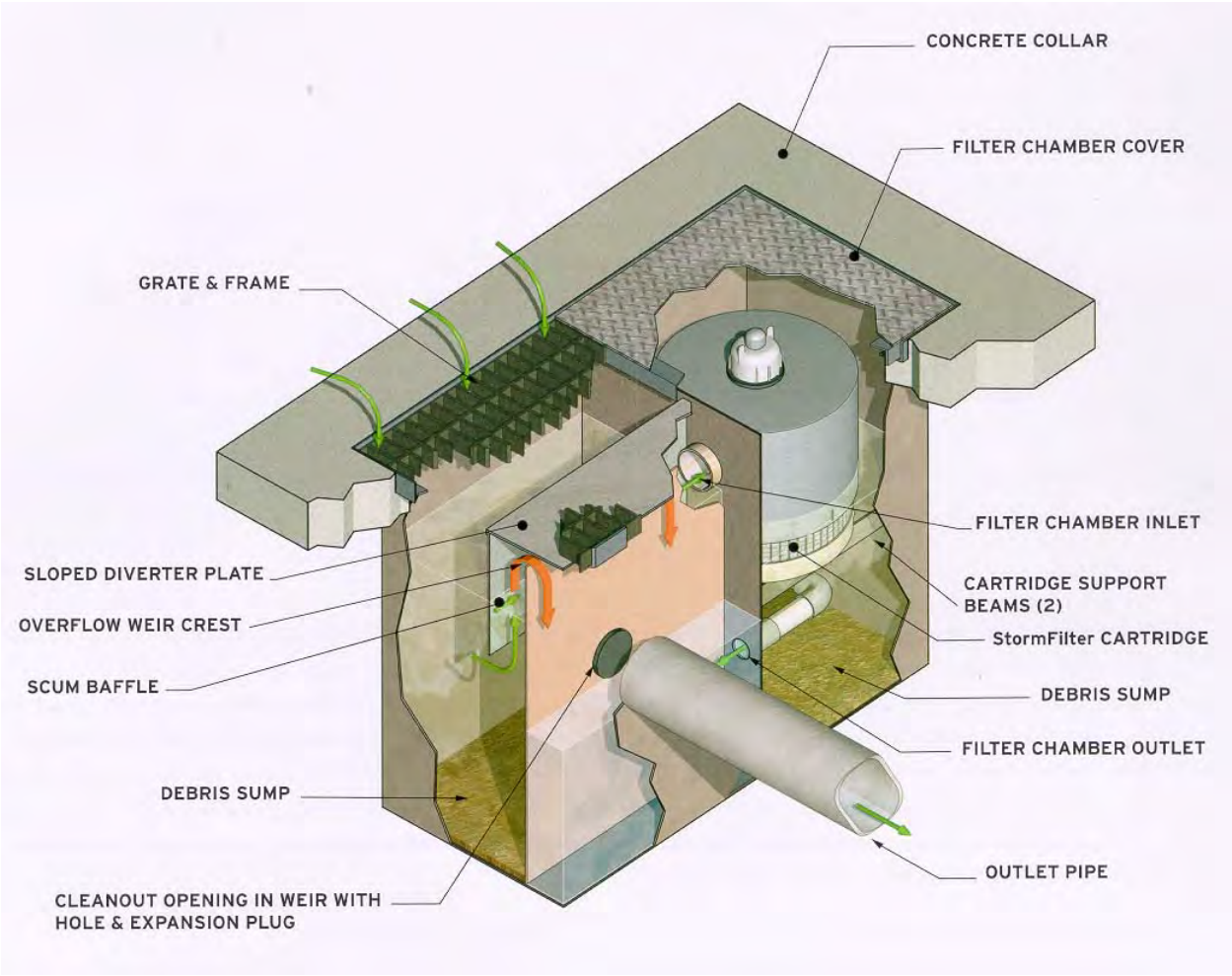

Figure MTC-50D. Example of a catch basin media filtration system (Graphic provided by Stormwater 360)

LANDSCAPE FILTRATION SYSTEMS MTC-60

Description

Landscape filtration, or manufactured biofiltration systems consist of subsurface structures that filter storm water runoff and irrigate turf or landscaped vegetation. Filtered outflow can be stored for future use, allowed to infiltrate into the soil or discharged to the conventional storm drain system. The filter is composed of sand or a compost mix. The filter media and vegetation root system has the capability to remove suspended and dissolved solids, nutrients, bacteria and organics from storm water runoff. Pretreatment can be applied to remove litter, debris and coarse sediment loads that may clog the filter. Overflow or bypass structures may be required to protect against flooding from larger events or backup if filter plugging occurs.

Applications

Landscape filtration systems can be used to treat runoff from buildings, roadways, parking lots, service stations, garages and storage yards. Self-contained landscape filtration systems are preferred over infiltration practices when potential contamination of groundwater is a concern. In addition, this treatment control can be applied where native soils cannot treat runoff adequately or where the ground water table is high.

Performance Data

Landscape filtration systems can be expected to have high removal efficiencies for sediment, nutrients, petroleum hydrocarbons and fecal coliform.

Limitations

- May become clogged with particulates over time.
- May require frequent maintenance in areas with high pollutant loads.

Siting Criteria

- Suitable for relatively small drainage areas from one to five acres.
- Can be installed in parkways, along roadways upstream of catch basin inlets, in medians and in vegetated areas between roadways and sidewalks.

Design and Construction Criteria

- At a minimum, should be sized to capture and treat the WQ_V as outlined in Section 3.2.2. However, alternative sizing criteria may be acceptable if it is commonly used in other communities and performance data is available that demonstrates acceptable pollutant removal rates.
- The porosity of the filter media must be considered when sizing.
- May be used on sites with impermeable soils since the runoff filters through filter media, not native soils.
- Refer to the manufacturer's specifications for additional design and construction criteria.

Inspection and Maintenance Requirements

- Inspect several times during the first year to establish cleaning frequencies.
- At a minimum, landscape filtration systems should be cleaned once a year.

Additional Information

The system manufactured by Evaporative Control Systems, Inc. (ECS) can also be used as a subsurface irrigation system for some or all site vegetation (Figure MTC-60A). This system reportedly uses approximately 58% less water than sprinkler irrigation systems and requires approximately 50% less fertilizer. In addition, it provides up to 1 inch/hr of drainage and 2 ½ gallons of storage per square foot. Therefore, a development that incorporates a subsurface ECS system into both onsite landscaping and adjacent to roadways may not require a conventional catch basin and underground storm drain pipe system.

References and Sources of Additional Information

California Stormwater Quality Association (CASQA), 2003. California Stormwater Best Management Practice Handbook, New Development and Redevelopment. http://www.cabmphandbooks.com/Development.asp

Evaporative Control Systems, Inc. http://www.ecsgreen.com/about.htm

Filterra™ Stormwater Bioretention Filtration System http://www.americastusa.com/filterra.html

LANDSCAPE FILTRATION SYSTEMS MTC-60

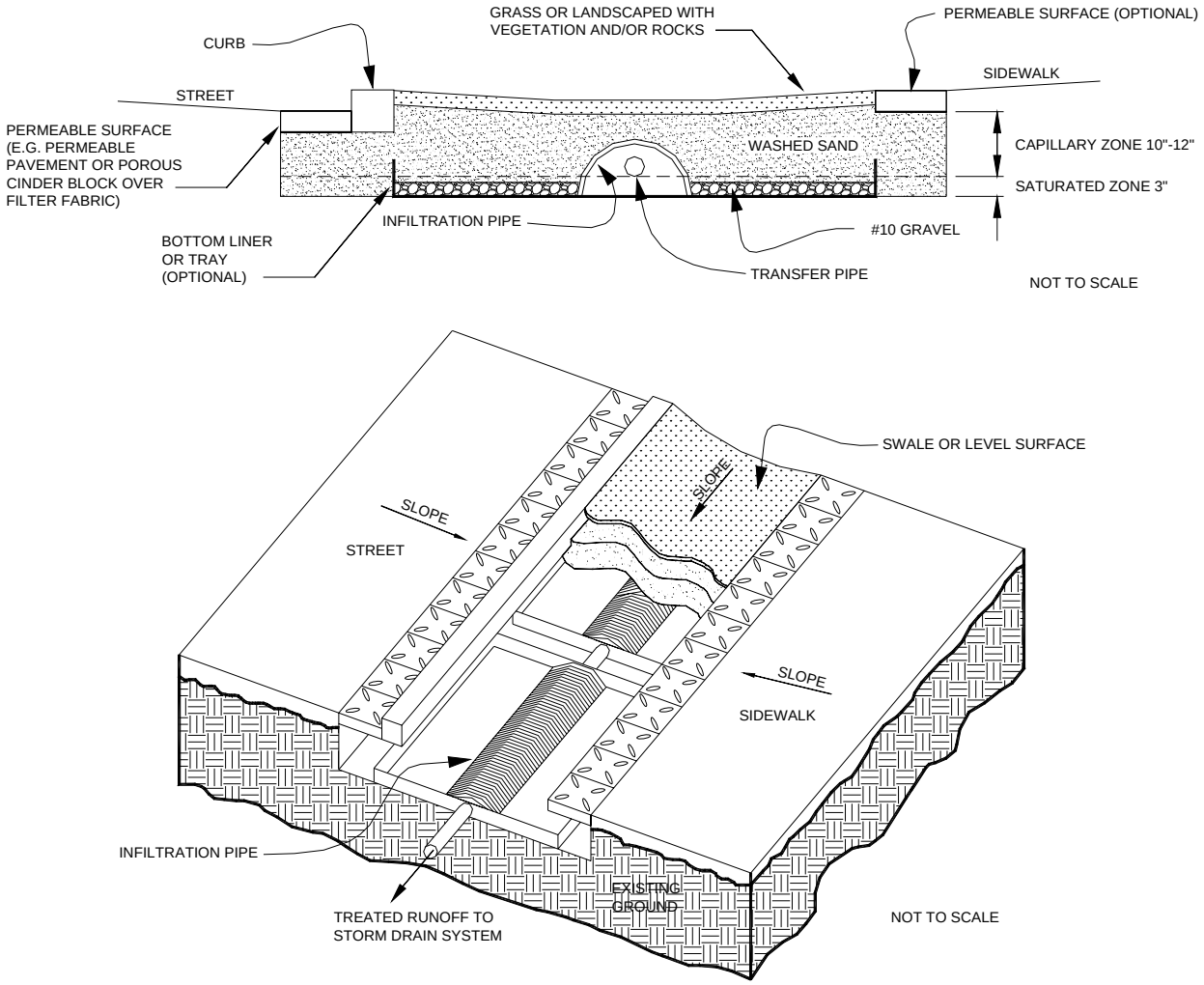

Figure MTC-60A. Example of a landscape filtration system located between the street and the sidewalk (Graphic developed by Kennedy/Jenks and ECS, Inc.).

LANDSCAPE FILTRATION SYSTEMS MTC-60

Figure MTC-60B. Example of a landscape filtration system with an underdrain to convey infiltrate to the storm drain system (Graphic provided by Americast, Inc.)

GROSS SOLIDS REMOVAL DEVICES MTC-70

Description

Gross Solids Removal Devices (GSRDs) are designed for the removal of litter and solids transported by storm water. Linear radial devices use louvered well casings with slotted openings. Litter and solids are trapped in the casings while flow passes radially through the louvers. These systems capture litter and solids 0.25 inch and larger. These devices are designed to work in-line with the existing storm drain system and can be retrofit into existing pipeline. They can also be placed in end-pf pipe configuration. An overflow/bypass device can be incorporated if the device becomes clogged.

Applications

Should be considered for areas where receiving water bodies are trash, litter, or other debris is considered a major concern.

Performance Data

Gross Solids Removal Devices can be expected to have high removal efficiency for litter and debris. The device requires very little head to operate and has been pilot tested for a 1 percent slope, but may work on flatter slopes.

Limitations

- Removal efficiency can be decreased with accumulation of debris and sediment.
- Designed only to remove litter and solids, does not provide nutrient removal.
- Require sufficient space for maintenance and inspection including use of vacuum trucks or other large equipment for trash removal.

Siting Criteria

- Suited for narrow and flat right-of-way with limited space.
- Requires low hydraulic head to operate.
- Maximum installation depth of 8 feet suggested.
- Device length is sized according to drainage area.
- Contained in a concrete block or on an open pad.

Design and Construction Criteria

- Sized to accommodate gross pollutants storage for a given maintenance period, typically annually.
- Screen section diameter and length are designed for site specific needs. Diameters range in size from 6 to 60 inches. Sections available in 5 foot lengths.

- Litter and debris accumulation data for a given drainage area should be available to properly size the device; if not available than 24.5 ft^3/ha/yr may be used.
- Size for peak design flow while carrying design gross loads.
- Can be placed in an open channel, in a vault, or as an end-of-pipe feature.
- Vaults can be constructed with grates or covers. Recommended to keep out wind-blown material which may enter concrete vault and be discharged into the storm drain system.
- Vaults can be constructed as traffic or non-traffic rated.
- Can be designed both in-line and off-line. In-line configuration incorporates a bypass to eliminate back-up in the storm water conveyance system.
- Energy dissipation devices may be incorporated.
- The device must drain within 72 hours to avoid vector breeding.
- Available from the manufacturer in a variety of steel types and sizes. For corrosion resistance the screens are available in stainless, galvanized, high strength-low alloy steel.
- Refer to the manufacturer's specifications for additional design and construction criteria.

Inspection and Maintenance Requirements

- Annual maintenance is required at the end of the rainy season to remove accumulated trash, debris, and sediment.
- Designed to contain a full storm season amount of debris without impeding passage of storm water.
- Inspect at the beginning of the rainy season as well as a few times during the rainy season following significant storm events.
- Should be cleaned when accumulation is at 50 percent of capacity.
- Screens may need to be power washed to remove fine sediment.
- Litter can be removed at the job-site with a vacuum truck or screens can be taken off-site for cleaning.
- Access to the interior through hatchways installed at the top of the screen. Additional access can also be provided via a perforated door at the downstream end of the device.
- Special fittings and access features can be installed to facilitate cleaning and maintenance.

References and Sources of Additional Information

California Department of Transportation (Caltrans). 2003. Final Report Phase 1 Gross Solids Removal Devices Pilot Study: 2001-2002. http://www.dot.ca.gov/hq/env/stormwater/special/newsetup/_pdfs/litter/CTSW-RT-03-072.pdf

Nevada Department of Transportation (NDOT). 2004. Stormwater Quality Design Manuals: Planning and Design Guide. http://www.nevadadot.com/reports_pubs/Water_Quality/pdfs/PDG_PlanningAndDesignGuide.pdf

Roscoe Moss Company http://www.roscoemoss.com/gsrd.html

Sobleman, T.B. et al. 2005. Caltrans Takes Out the Trash. *Civil Engineering Magazine, vol. 75:10.* http://www.pubs.asce.org/ceonline/ceonline05/1005feat.html

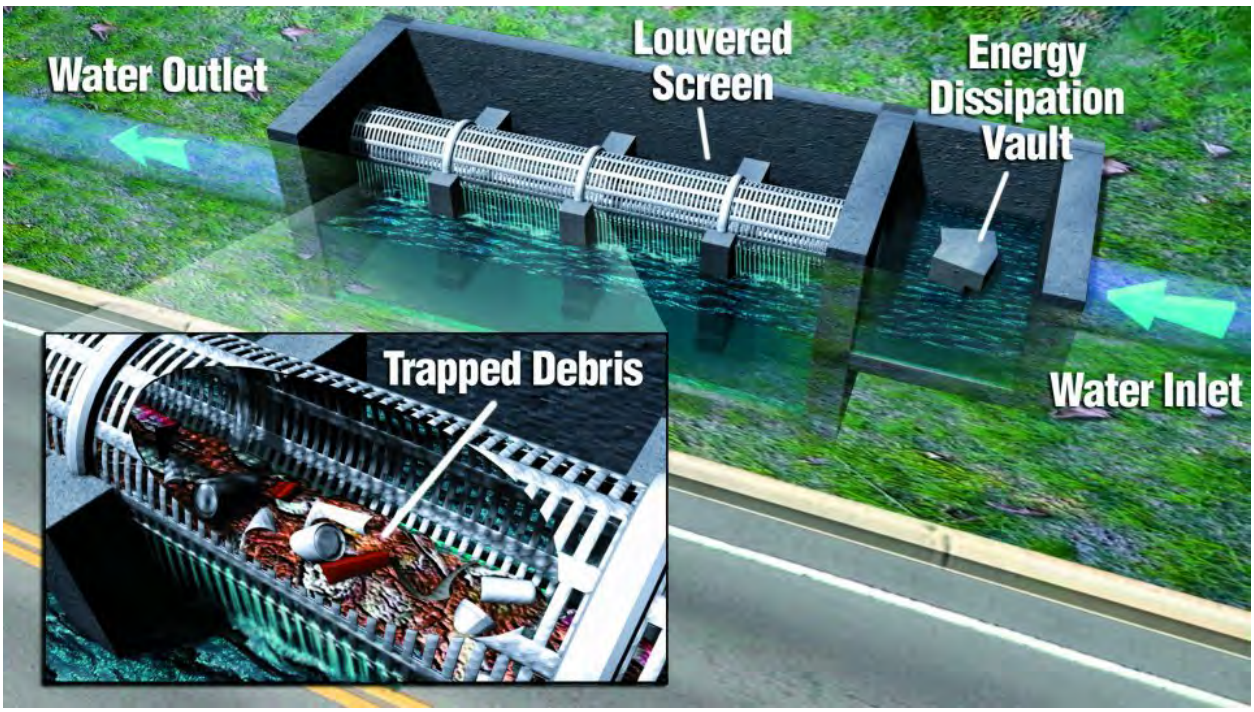

Figure MTC-70A. Linear Radial Gross Solids Removal Device with an energy dissipating feature. (Graphic courtesy of Civil Engineering Magazine)

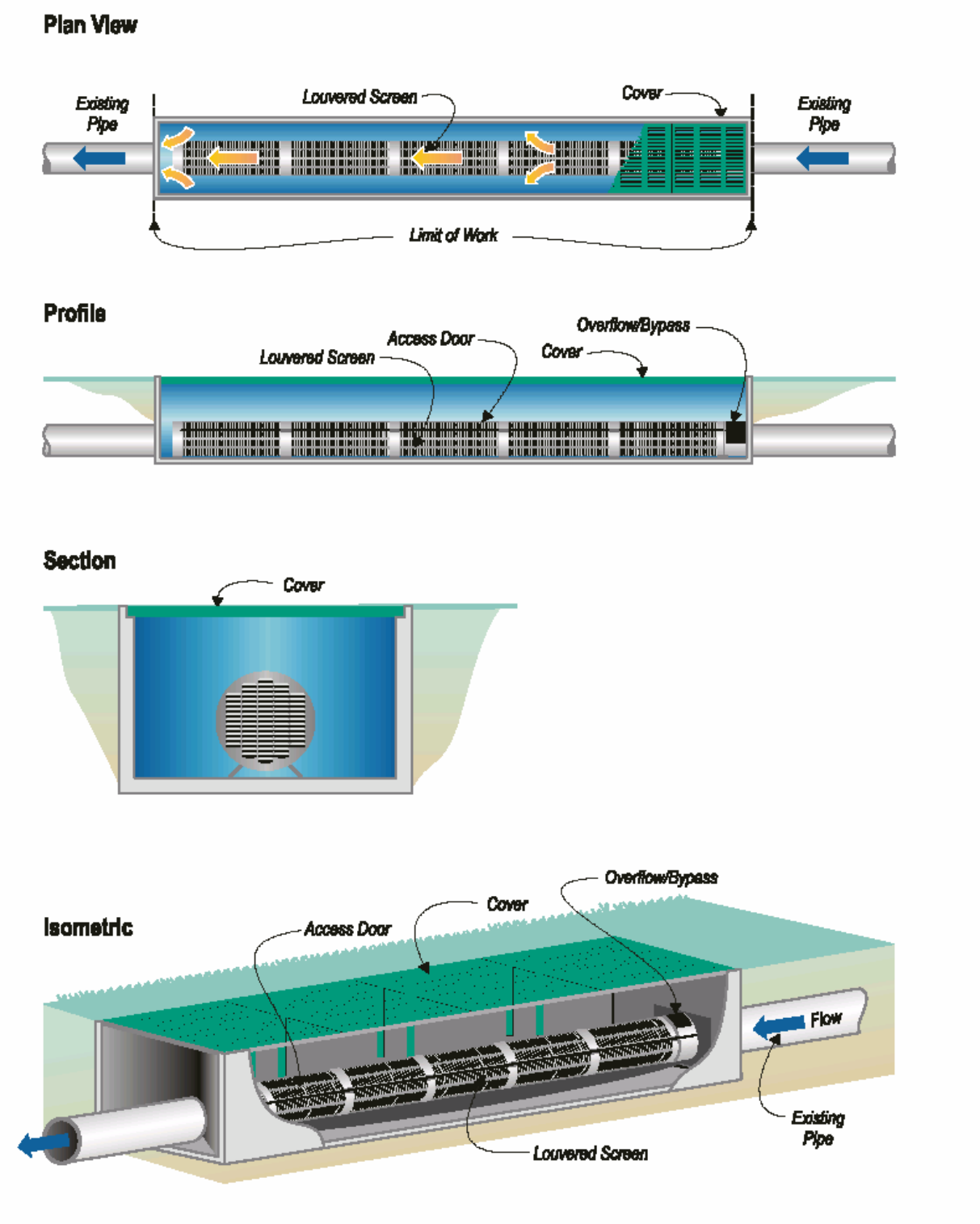

Figure MTC-70B. Example of a Linear Radial Device (graphic courtesy of Caltrans)

Appendix A

Structural Control Design and Selection Matrices

Treatment Control Group	Treatment Control Design	Design Matrix 1. Land Use					
		Rural	Residential	Roads and Highways	Commercial/ High Density	Hotspots	Ultra Urban
Vegetative Treatment Systems	TC-10 Vegetated Swales	S	S	S	S	S	S
	TC-11 Vegetated Buffer Strips	A	A	S	S	S	S
Infiltration Systems	TC-20 Infiltration Trenches	A	A	A	A	X	S
	TC-21 Infiltration Basins	A	A	A	A	X	S
Bioretention Systems	TC-30 Landscape Detention	A	A	A	A	S	A
Extended Detention Basins	TC-40 Sedimentation Basins	A	A	S	A	S	S
	TC-41 Sand Filter Basins	A	A	S	A	S	A
Ponds and Constructed Wetlands	TC-50 Storm Water Ponds	A	A	A	S	A	X
	TC-51 Storm Water Wetlands	A	A	S	S	A	X
Media Filtration Systems	TC-60 Surface Sand Filter	X	S	A	A	A	A
	TC-61 Underground Sand Filter	X	S	S	A	A	A
	TC-62 Porous Pavement	S	S	S	A	X	S
Oil and Water Separators	TC-70 Oil and Water Separators	S	S	S	A	A	A

A = Applies under most conditions
S = Applies under some conditions
X = Not applicable

Treatment Control Group	Treatment Control Design	Design Matrix 2. Site Physical Features				
		Soils	Water Table	Drainage Area (AC)	Site Slope	Head (ft)
Vegetative Treatment Systems	TC-10 Vegetated Swales	Native or engineered soils	>3 feet	10 max	No more than 5%	3 to 5 ft
	TC-11 Vegetated Buffer Strips			5 max	No more than 10%	NA
Infiltration Systems	TC-20 Infiltration Trenches	Min infiltration rate 0.5 inch/hr	>3 feet	10 max	Generally no more than 20%	~ 1 ft
	TC-21 Infiltration Basins			5 to 50	Generally no more than 15%	3 to 5 ft
Bioretention Systems	TC-30 Landscape Detention	Imported soil	>3 feet	1 max	Generally no more than 20%	~ 5 ft
Extended Detention Basins	TC-40 Sedimentation Basins	Native or engineered soils	>3 feet	5 min	Generally no more than 20%	~4 ft
	TC-41 Sand Filter Basins			10 max	Generally no more than 20%	~4 ft
Ponds and Constructed Wetlands	TC-50 Storm Water Ponds	HSG A soils may require liner	>3 feet	25 min	Generally no more than 15%	6 to 8 ft
	TC-51 Storm Water Wetlands				Generally no more than 8%	3 to 5 ft
Media Filtration Systems	TC-60 Surface Sand Filter	Native or engineered soils	>3 feet	5 max	Generally no more than 6%	~ 5 ft
	TC-61 Underground Sand Filter			1.5 max		5 to 7 ft
	TC-62 Porous Pavement			No Limit	Generally no more than 5%	NA
Oil and Water Separators	TC-70 Oil and Water Separators	Native or engineered soils	NA	No Limit	Generally no more than 10%	3 to 5 ft

Treatment Control Group	Treatment Control Design	Design Matrix 3. Storm Water Management Capability			
		Water Quality	Recharge	Channel Protection	Flood Control
Vegetative Treatment Systems	TC-10 Vegetated Swales	A	S	S	S
	TC-11 Vegetated Buffer Strips	A	S	A	X
Infiltration Systems	TC-20 Infiltration Trenches	A	A	S	S
	TC-21 Infiltration Basins	A	A	S	S
Bioretention Systems	TC-30 Landscape Detention	A	S	S	S
Extended Detention Basins	TC-40 Sedimentation Basins	A	S	S	A
	TC-41 Sand Filter Basins	A	S	S	A
Ponds and Constructed Wetlands	TC-50 Storm Water Ponds	A	S	S	A
	TC-51 Storm Water Wetlands	A	S	S	A
Media Filtration Systems	TC-60 Surface Sand Filter	A	X	S	S
	TC-61 Underground Sand Filter	A	X	S	S
	TC-62 Porous Pavement	A	S	S	S
Oil and Water Separators	TC-70 Oil and Water Separators	S	X	X	X

A = Practice generally meets storm water management goals
S = Practice can provide some benefit depending on site constraints
X = Practice can rarely be used to meet this goal

Treatment Control Group	Treatment Control Design	Design Matrix 4. Community and Environmental Factors					
		Cold Climate Limitations	Ease of Maintenance	Affordability	Community Acceptance	Safety	Habitat
Vegetative Treatment Systems	TC-10 Vegetated Swales	M	M	H	H	H	L
	TC-11 Vegetated Buffer Strips	M	M	H	H	H	L
Infiltration Systems	TC-20 Infiltration Trenches	M	M	M	M	H	L
	TC-21 Infiltration Basins	M	M	M	M	H	L
Bioretention Systems	TC-30 Landscape Detention	M	M	M	H	H	M
Extended Detention Basins	TC-40 Sedimentation Basins	M	M	M	H	M	L
	TC-41 Sand Filter Basins	M	M	M	H	H	L
Ponds and Constructed Wetlands	TC-50 Storm Water Ponds	M	M	M	M	M	H
	TC-51 Storm Water Wetlands	M	M	M	M	M	H
Media Filtration Systems	TC-60 Surface Sand Filter	L	M	L	M	M	L
	TC-61 Underground Sand Filter	H	M	L	H	H	L
	TC-62 Porous Pavement	L	M	M	H	H	L
Oil and Water Separators	TC-70 Oil and Water Separators	H	M	M	H	H	L

H = High benefit and/or low limitations
M = Medium benefit and/or limitations
L = Low Benefit and/or high limitations

Treatment Control Group	Treatment Control Design	Design Matrix 5. Pollutant Removal Effectiveness						
		Sediment	Nutrients	Trash	Metals	Bacteria	Oil and Grease	Organics
Vegetative Treatment Systems	TC-10 Vegetated Swales	M	L	L	M	L	M	M
	TC-11 Vegetated Buffer Strips	H	L	M	H	L	H	M
Infiltration Systems	TC-20 Infiltration Trenches	H	H	H	H	H	H	H
	TC-21 Infiltration Basins	H	H	H	H	H	H	H
Bioretention Systems	TC-30 Landscape Detention	H	M	H	H	H	H	H
Extended Detention Basins	TC-40 Sedimentation Basins	M	L	H	M	L	L	L
	TC-41 Sand Filter Basins	H	M	H	M	L	L	M
Ponds and Constructed Wetlands	TC-50 Storm Water Ponds	H	M	H	H	H	H	H
	TC-51 Storm Water Wetlands	H	M	H	H	H	H	H
Media Filtration Systems	TC-60 Surface Sand Filter	H	M	H	H	M	M-H	M-H
	TC-61 Underground Sand Filter	H	L	H	H	M	M-H	M-H
	TC-62 Porous Pavement	H	M	L	M	M	M-H	M-H
Oil and Water Separators	TC-70 Oil and Water Separators	L	L	M	L	L	M-H	L

H = High pollutant removal effectiveness
M = Medium pollutant removal effectiveness
L = Low pollutant removal effectiveness

Appendix B

Example Design Calculations for Structural Treatment Controls

By CJC Date 11/15/04 Subject LANDSCAPE DETENTION FOR RENO PARKING LOT Job No. _____
Checked By JbL Date 01/19/04 Sheet 1 of 4

HYPOTHETICAL SCENARIO – 2.12 ac AREA FOR A PARKING LOT

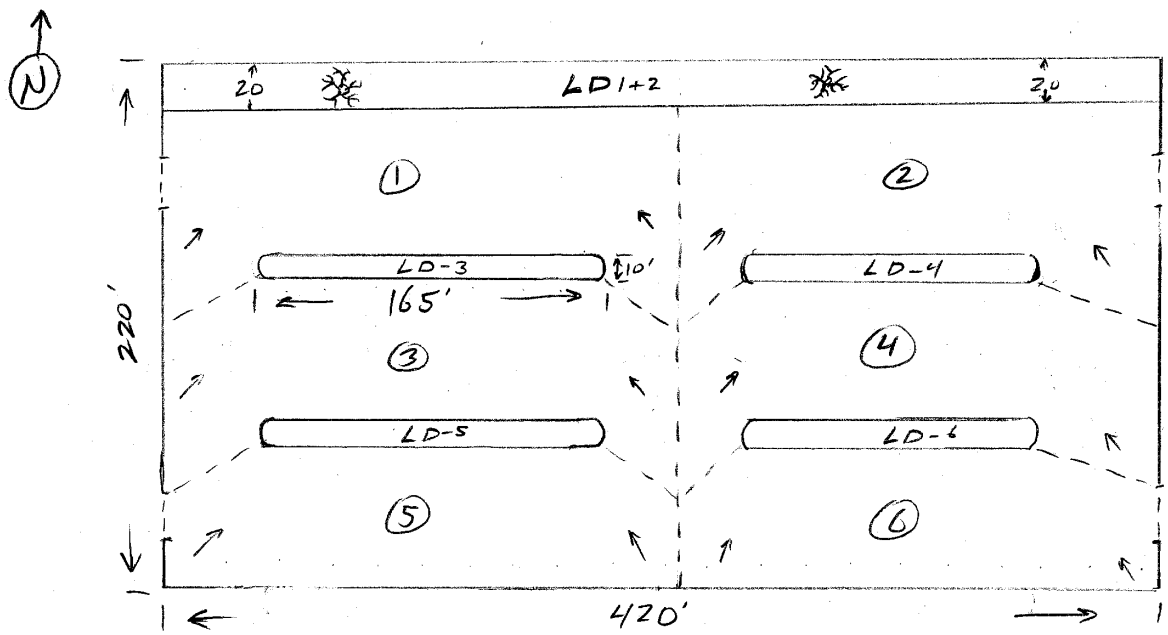

NTS

LD = LANDSCAPE DETENTION AREAS = 20×420 = 8,400
4(165×10) = 6,600
15,000 ft²

PAVED AREA = (220×420) − 15,000
= 77,400 ft² = 1.78 acres

PAVED AREA GRADED TO DRAIN TOWARDS LD AREAS

DRAINAGE AREAS ① + ② = 27,400 ft² (Assumed)

DRAINAGE AREAS ③, ④, ⑤ & ⑥ = 12,500 ft² each = 50,000 ft² Total

1) DETERMINE WQv FOR LD1+2 (SECTION 3.2.2) $WQv = \frac{PRvA}{12}$

Assume I = 100% impervious $Rv = 0.05 + 0.009I$
P = 0.6 in $Rv = 0.05 + (0.009)(100) = 0.95$

$$WQv = \frac{(0.6)(0.95)(27{,}400)}{12} = 1{,}302 \text{ ft}^3 \text{ for LD1+2}$$

2) DETERMINE WQv FOR LD-3, -4, -5 and -6

$$WQv = \frac{(0.6)(0.95)(12,500)}{12} = 594 ft^3$$

Per BMP Fact Sheet TC-30, Landscape Detention is well suited for parking lot islands and median strips

3) CHECK DESIGN AND SELECTION MATRICES

MATRIX 1 - Land use applies ✓
2 - Site Physical Factors -
Water Table >10 ft per Geotechnical Report ✓
Drainage Areas < 1 ac per prelim site plan ✓
3 - SW Management Applies
→ Geotechnical Report indicate clayey expansive soils with very low infiltration rates ✱
4 - Community and Environmental Factors good ✓
5 - High Pollutant Removal Effectiveness ✓

✱ Since Native soils are expansive with little infiltration capacity - an underdrain with an impermeable liner should be installed - (see typical sections)

4) DETERMINE DIMENSIONS OF LANDSCAPE DETENTION PARKING LOT ISLANDS (LD-3, LD-4, LD-5 and LD-6)

Design so WQv fills voids of sand / peat mix
Assume 75% medium sand 25% peat mix - porosity = 40%
(Source Driscoll, Groundwater and Wells, 1986)

$$\text{Total LD volume} = \frac{WQv}{\text{Porosity}} = \frac{594}{0.4} = 1,485 ft^3$$

By CJC Date 1/15/04 Subject LANDSCAPE DETENTION Job No. _____
Checked By JBL Date 01/19/04 Sheet 3 of 4

Surface area (SA) = 165 x 10 = 1,650 ft²

Depth (D) = Total Volume / SA = $\frac{1,485}{1650}$ = 0.9'

TC-30 Design & Contruction Criteria indicates a minimum 18" sand/peat should be used

TYPICAL SECTIONS

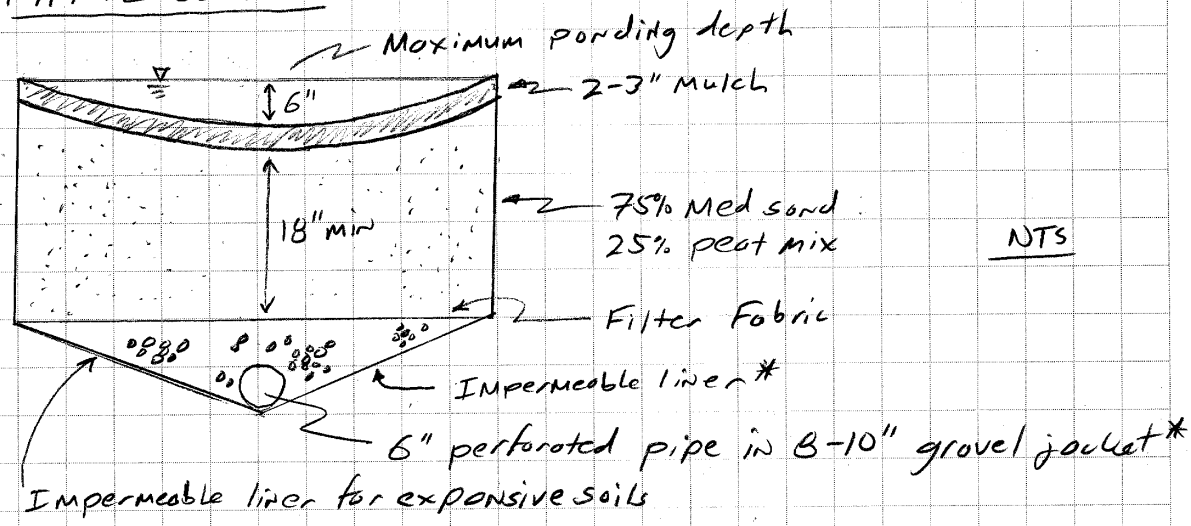

NTS

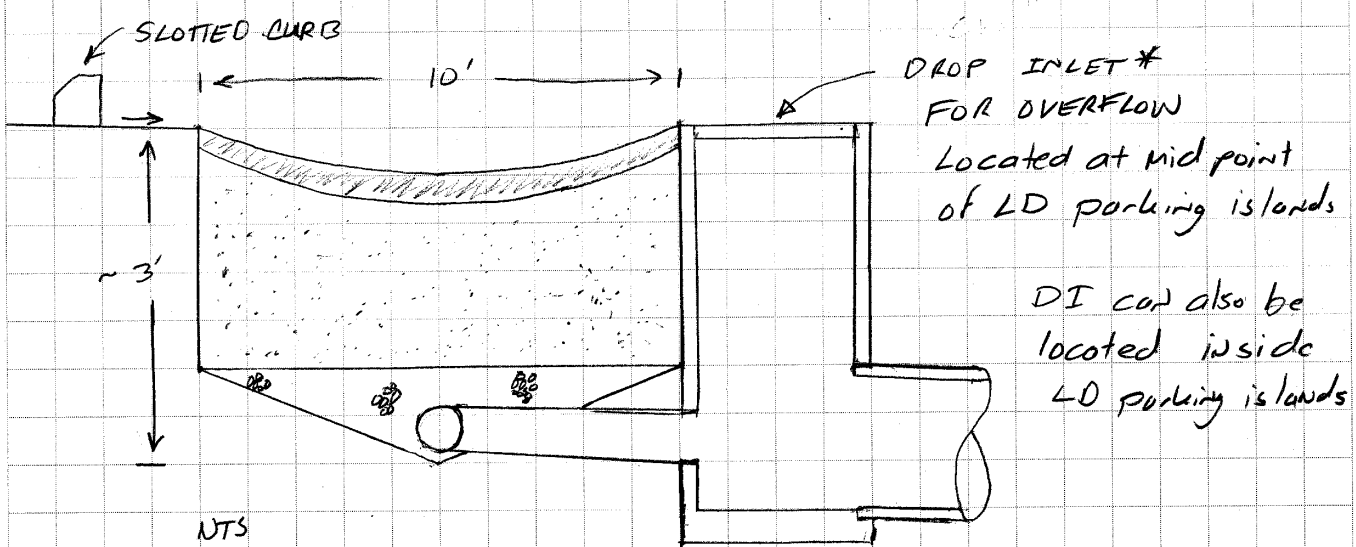

NTS

* Impermeable Liner, Underdrain, Drop Inlet and Underground storm Drain Pipes May be eliminated when sandy soils allow for infiltration (min 0.5"/hr)

By CJL Date 1/15/04 Subject LANDSCAPE DETENTION Job No. _____

Checked By JbL Date 01/19/04 Sheet 4 of 4

Hypothetical Underground Storm Drain System

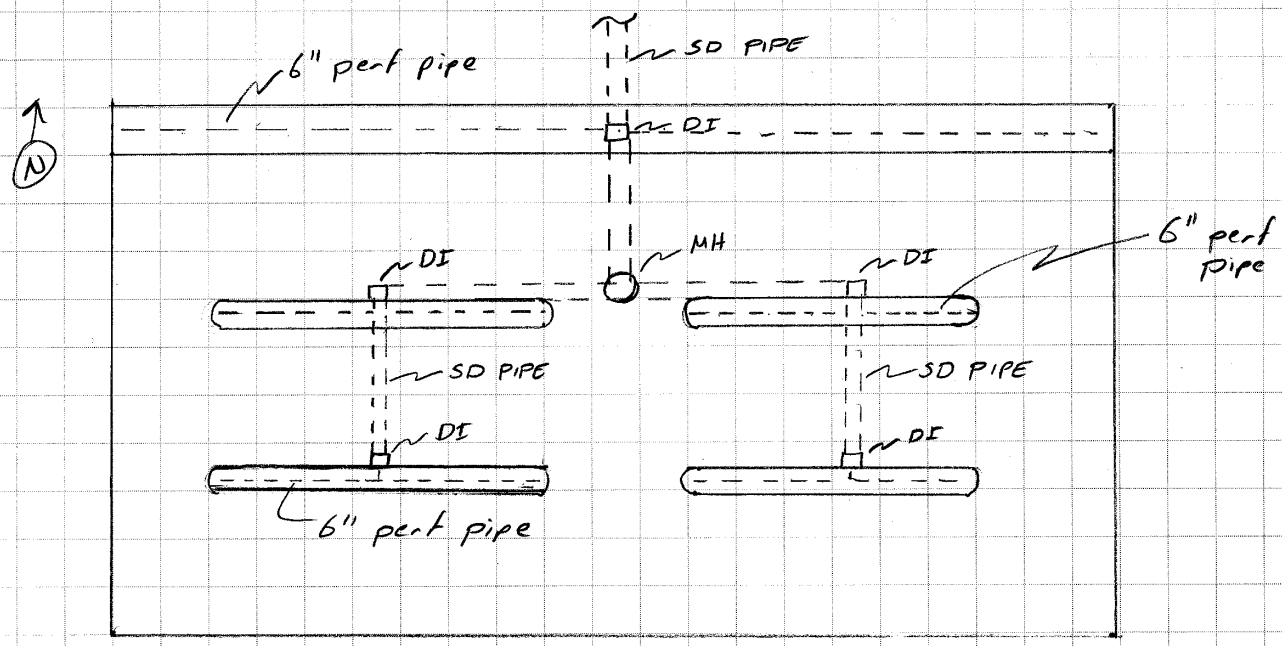

Stormwater access to Landscape Detention areas can be provided with slotted Curb or Curb Cuts

5) DESIGN LD 1+2 LANDSCAPE DETENTION AREA WITH SAME DIMENSIONS AS PARKING LOT ISLAND LD AREAS

ADDITIONAL AREA CAN BE UTILIZED AS A GRASS BUFFER STRIP

By CJC Date 12/15/03 Subject INFILTRATION TRENCH FOR WASHOE COUNTY COMMERCIAL SITE Job No.

Checked by JbL Date 01/19/04 Sheet 1 of 6

HYPOTHETICAL SCENARIO
PROPOSED INFILTRATION TRENCHES
COMMERCIAL DEVELOPMENT 150,000 ft² = 3.44 acres

PRELIMINARY SITE PLAN

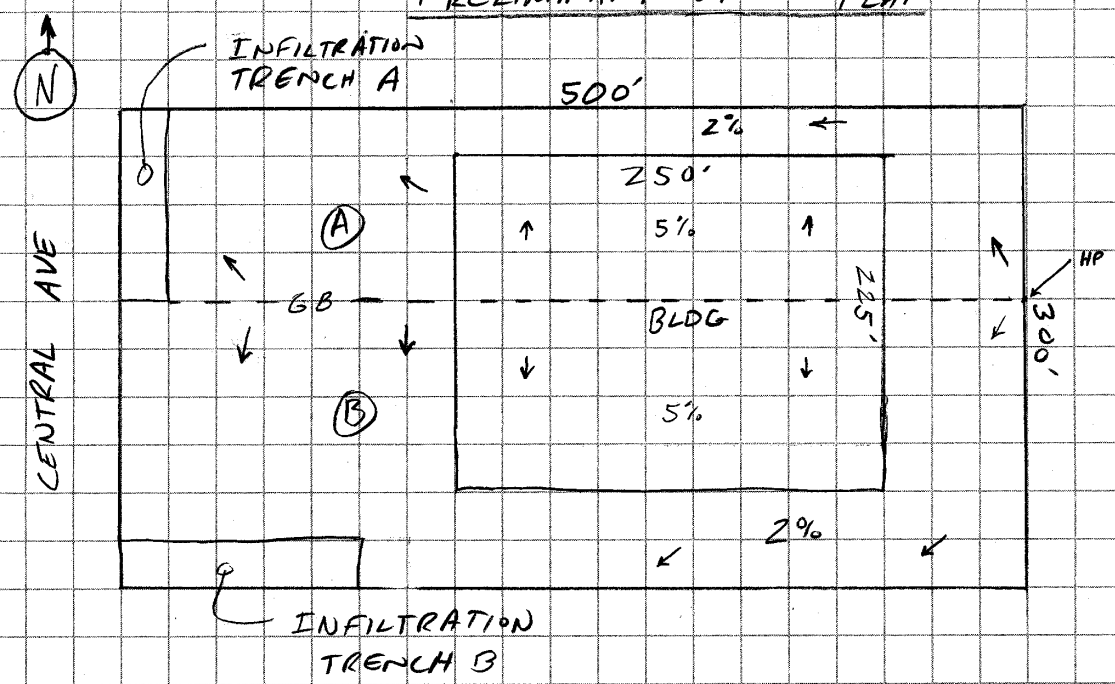

AREA (A) = 500' x 125' = 62,500 ft² = 1.43 acres

AREA (B) = 500' x 175' = 87,500 ft² = 2.01 acres

1) BASED ON GEOTECHNICAL REPORT SITE SOILS HAVE AN INFILTRATION RATE OF 0.5 to 1.0 in/hr AND GROUNDWATER >15 FT BGS
2) BASED ON PRELIMINARY SITE PLAN - PROPOSED SITE WILL HAVE SLOPES OF 2 to 5%
3) SITE IS LOCATED WITHIN AN AREA NOTED AS HAVING FAVORABLE RECHARGE CONDITIONS IN THE SOUTHERN WASHOE COUNTY GROUNDWATER RECHARGE ANALYSIS (2001).

★ INFILTRATION OF STORMWATER APPROPRIATE

By CJC Date 12/15/03 Subject INFILTRATION TRENCH Job No.

Checked by JbL Date 01/19/04 Sheet 2 of 6

4) CHECK DESIGN AND SELECTION MATRIX - APPENDIX A

MATRIX 1 - INFILTRATION TRENCH APPLIES ✓

MATRIX 2 - SOILS > 0.5 in/hr ✓
WATER TABLE > 3 FT ✓
DRAINAGE AREA < 10 acres ✓
SLOPES < 20% ✓

MATRIX 3 - WATER QUALITY & RECHARGE ✓

MATRIX 4 - MAINTENANCE = LOW
AFFORDABILITY = MED
COMMUNITY ACCEPTANCE = HIGH ✓
SAFETY = HIGH ✓
HABITAT = LOW

MATRIX 5 - HIGH POLLUTANT REMOVAL EFFECTIVENESS ✓

TABLE 2-3 ANTICIPATED AND POTENTIAL POLLUTANTS TARGETED WITH THIS BMP ✓

5) DETERMINE WATER QUALITY VOLUME WQ_v (SECTION 3.2.2)

AREA Ⓐ $WQ_v = \frac{P R_v A}{12}$ $R_v = 0.05 + 0.009I$

$I = 95\%$ impervious $R_v = 0.91$

$WQ_v = \frac{(0.6)(0.91)(62{,}500)}{12} = 2844 \text{ ft}^3 =$ AREA Ⓐ WQ_v

AREA Ⓑ $WQ_v = \frac{(0.6)(0.91)(87{,}500 \text{ ft}^2)}{12} = 3{,}981 \text{ ft}^3$

6) PRELIMINARY TRENCH DESIGN FOR DRAINAGE AREA (A)

AVAILABLE AREA FOR TRENCH A = 25' x 125' = 3,125 ft²
ASSUME A TRENCH 10' x 110' Surface Area (SA) = 1,100 ft²

TOTAL TRENCH VOL = $\frac{WQv}{\text{POROSITY}}$ ASSUME MEDIUM GRAVEL 32% POROSITY*

TOTOL V = $\frac{2844 \text{ ft}^3}{0.32}$ = 8,887.5 ft³

TRENCH DEPTH (D_T) = $\frac{V_{TOT}}{SA}$ = $\frac{8,888 \text{ ft}^3}{1,100 \text{ ft}^2}$ = 8.1 ft

* Per Driscoll, 1987, Groundwater And Wells
GRAVEL VOL = $V_{TOT} - WQv$ = 8,888 - 2,844 = 6,044 ft³

DETERMINE THE TIME REQUIRED TO DRAIN THE TRENCH

ASSUME I = 0.75 in/hr → RECONFIRM WITH FIELD TESTS
$(D_T)(I)$
(8.1)(12)(0.75) ≅ 73 hrs ~ 3 days to drain completely

7) DESIGN OVERFLOW WEIR BASED ON 5-YR STORM

ASSUMING PROPOSED PROJECT IS LOCATED IN WASHOE COUNTY USING EQUATIONS 701 AND 702 FROM THE WASHOE COUNTY HYDROLOGIC CRITERIA AND DRAINAGE DESIGN MANUAL - FIND THE TIME OF CONCENTRATION (t_c)

$t_c = t_i + t_t$

$t_i = \frac{1.8(1.1-R)L^{1/2}}{S^{1/3}}$

R = C = 0.88 (for pavement) Per Table 3-1

L = length of overland flow (assume 150 ft - back of lot)

S = Average Slope (2%)

$$t_i = \frac{1.8(1.1-0.85)(150)^{1/2}}{2^{1/3}} = 3.85 \text{ min}$$

$$t_t = \frac{L}{60V}$$

L = channelized flow in area (A) (assume = 450 ft @ 2 %)

V = 2.8 ft/sec per Figure 701

$$t_t = \frac{450}{(60)(2.8)} = 2.68 \text{ min}$$

$$t_c = 3.85 + 2.68 \text{ min} = 6.53 \text{ min}$$

ASSUME PROPOSED PROJECT IS IN WASHOE COUNTY ZONE 1 PER FIGURE 605 I = 1.95 in/hr (Washoe County Manual)

$Q_5 = CIA$

C = Rational Method Runoff Coefficient
I = Rainfall Intensity
A = Area of Drainage Area (A) in acres

DETERMINE COMPOSITE C

Roof = 100 x 250 = 25,000 ft² C = 0.85
TRENCH AREA = 25 x 125 = 3125 ft² C = 0.05
PAVED AREA = 62,500 − (25,000 + 3,125) = 34,375 ft² C = 0.88

$$C_{comp} = \frac{(25,000)(0.85) + (3125)(0.05) + (34,375)(0.88)}{62,500} = 0.83$$

A = 62,500 = 1.43 acres

$Q_5 = (0.83)(1.95)(1.43) \cong 2.31$ cfs = 5-year peak flow

USE WEIR EQUATION TO DETERMINE WEIR LENGTH

$Q_5 = C L h^{1.5}$

C = weir coefficient = 3.0
L = horizontal length of weir (ft)
h = depth of flow over weir (ft)
(assume desired depth = 2 inches)

$$L = \frac{Q_5}{C h^{1.5}} = \frac{2.31 \text{ ft}^3/\text{sec}}{(3.0)(2/12)^{1.5}} = 11.32 \text{ ft} \quad \text{use } 11.5 \text{ ft}$$

B) SITING AND PROPOSED GEOMETRY

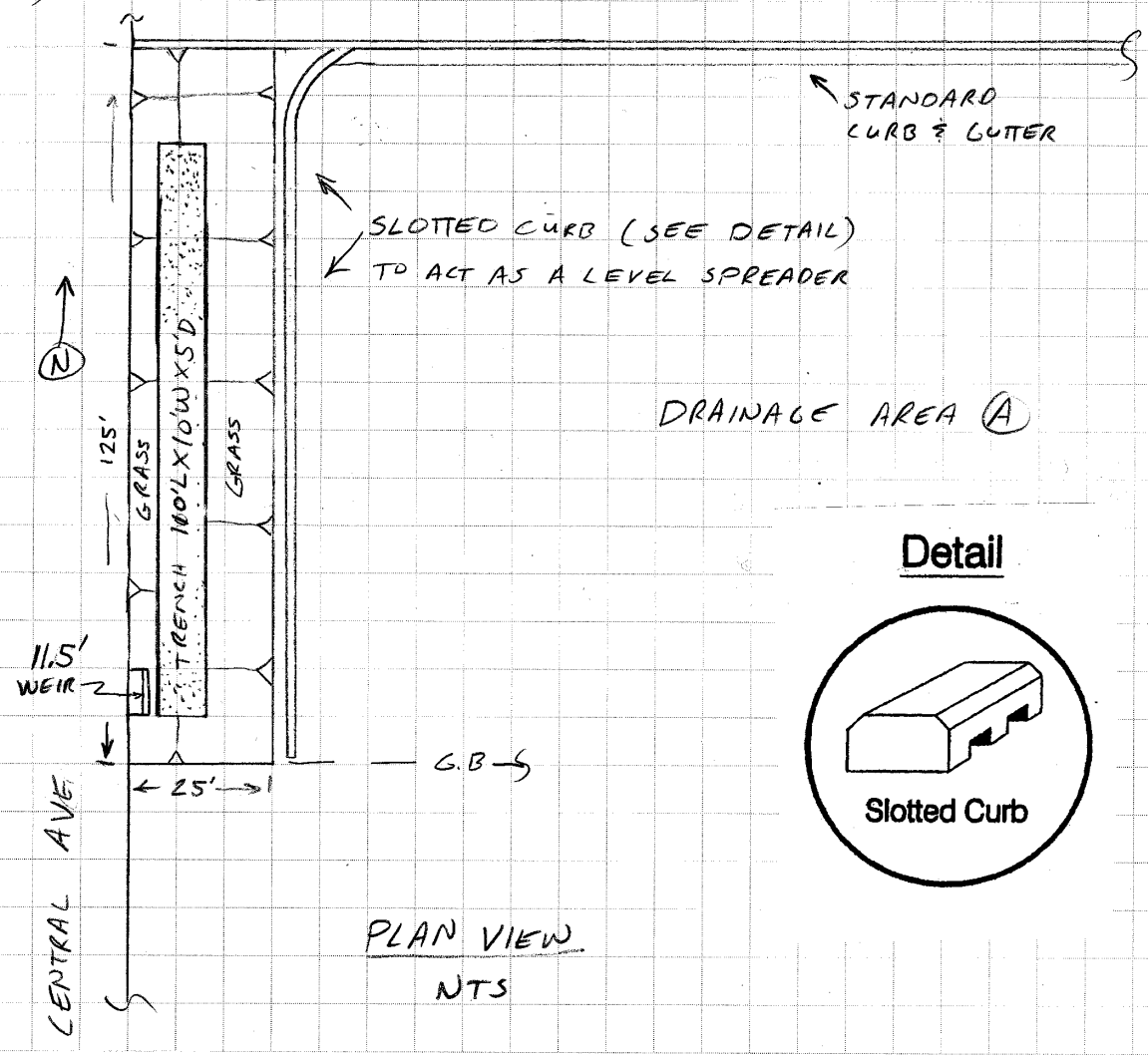

PLAN VIEW
NTS

Detail

4 x 4 Grid Sheet **Kennedy/Jenks Consultants**

By CJC Date 12/15/03 Subject INFILTRATION TRENCH Job No. _____

Checked By JBL Date 01/19/04 Sheet 6 of 6

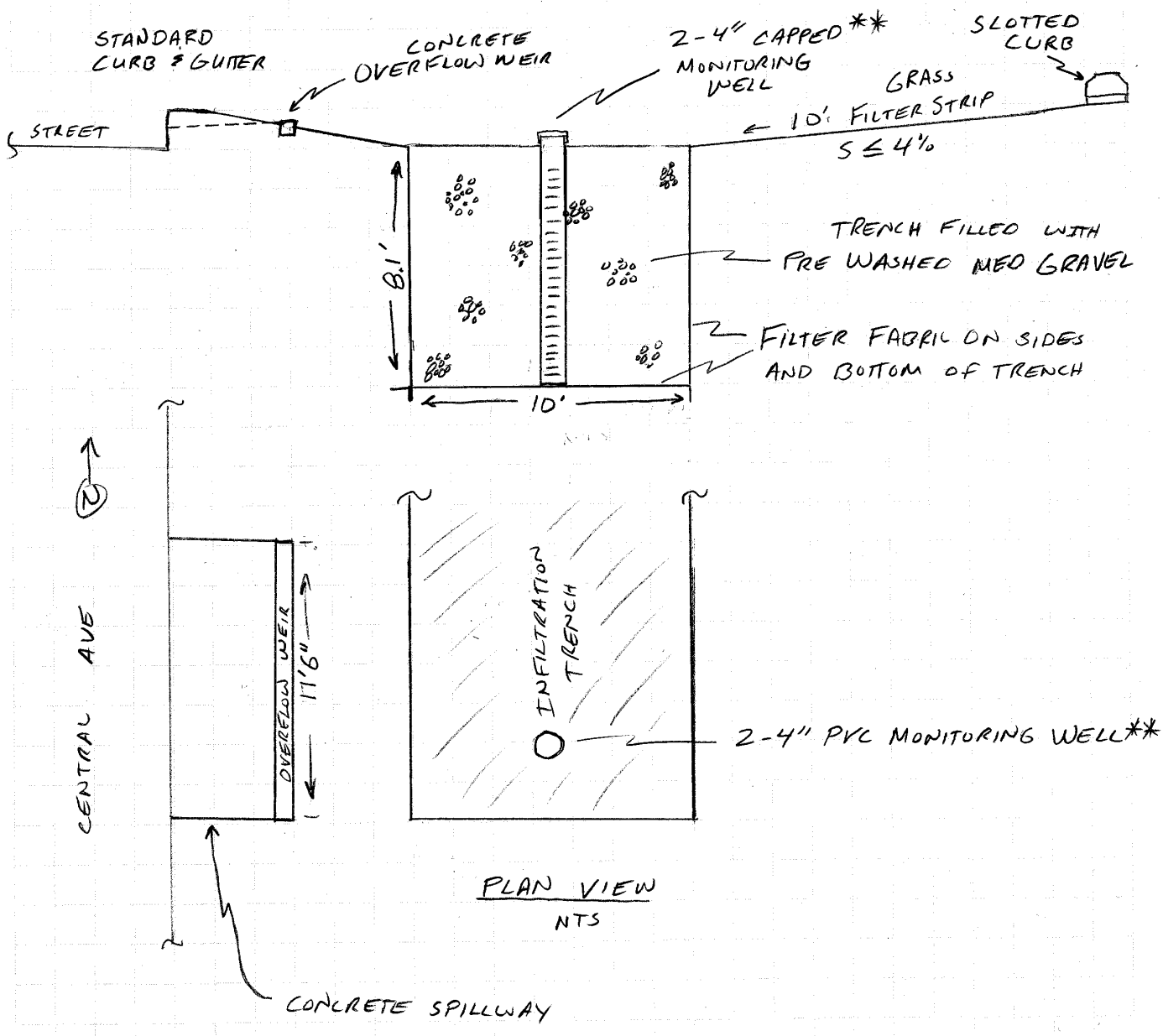

NOTE: *MUST CONFIRM INFILTRATION RATE OF SOILS IN VICINITY OF PROPOSED TRENCH PRIOR TO FINAL DESIGN

**RECCOMEND INSTALLATION OF A PERFORATED PVC PIPE TO MONITOR DRAINAGE TIME

By CJC Date 1/14/04 Subject VEGETATED SWALE & EXTENDED DETENTION BASIN FOR SPARKS RESIDENTIAL DEVELOPMENT Job No.

Checked By JDL Date 01/19/04 Sheet 1 of 12

HYPOTHETICAL SCENARIO: A GRASSY SWALE AND AN EXTENDED DETENTION BASIN ARE PROPOSED FOR A 6-ACRE PROPOSED RESIDENTIAL DEVELOPMENT (SEE PAGE 2). A PROPOSED PARKWAY SEPARATES THE NORTHERN HALF FROM THE SOUTHERN HALF OF THE DEVELOPMENT AND BOTH DRAIN TO AN EXISTING DRAINAGEWAY THAT IS NORMALLY DRY

- THE PROPOSED GRASSY SWALE WILL FOLLOW THE ROUTE OF THE EXISTING DRAINAGEWAY AS MUCH AS POSSIBLE, WHICH HAS A LONGITUDINAL SLOPE OF ~ 1.5%, L ≅ 500.

- THE NORTH AND SOUTH DRAINAGES WILL HAVE FINISHED GRADES RANGING FROM 2-5% (PER PRELIM SITE PLAN)

- PRE-PROJECT CONDITIONS = MIXED NATIVE GRASS & SHRUBS
  NORTH DRAINAGE 2.5 acres
  SOUTH DRAINAGE 3.5 acres

- DEPTH TO GROUNDWATER IN EXISTING ONSITE WELL ≅ 85 ft

1) CHECK DESIGN AND SELECTION MATRICES

MATRIX 1 - OK - Applies for Residential Land Use
2 - OK - Site Physical Factors Apply
3 - OK - Good for WQ
4 - OK - Affordability & Community Acceptance High
5 - OK - Pollutant Removal Effectiveness - Moderate

2) CALCULATE IMPERVIOUSNESS OF PROPOSED DEVELOPMENT

2 Roadways $(15 \times 450) + (15 \times 420) = 13{,}050\ ft^2$
12 Driveways ave length = 30 ft ave width = 10 ft = $3600\ ft^2$
12 Homes - ave roof, walkway & outbuilding area = $2{,}600\ ft^2$
1/4 acre lots $12 \times 2600 = 31{,}200\ ft^2$

4 x 4 Grid Sheet **Kennedy/Jenks Consultants**

By CJC Date 1/14/04 Subject SITE 2 Job No.

Checked by ~~CJC~~ JBL Date 01/19/04 Sheet 2 of 12

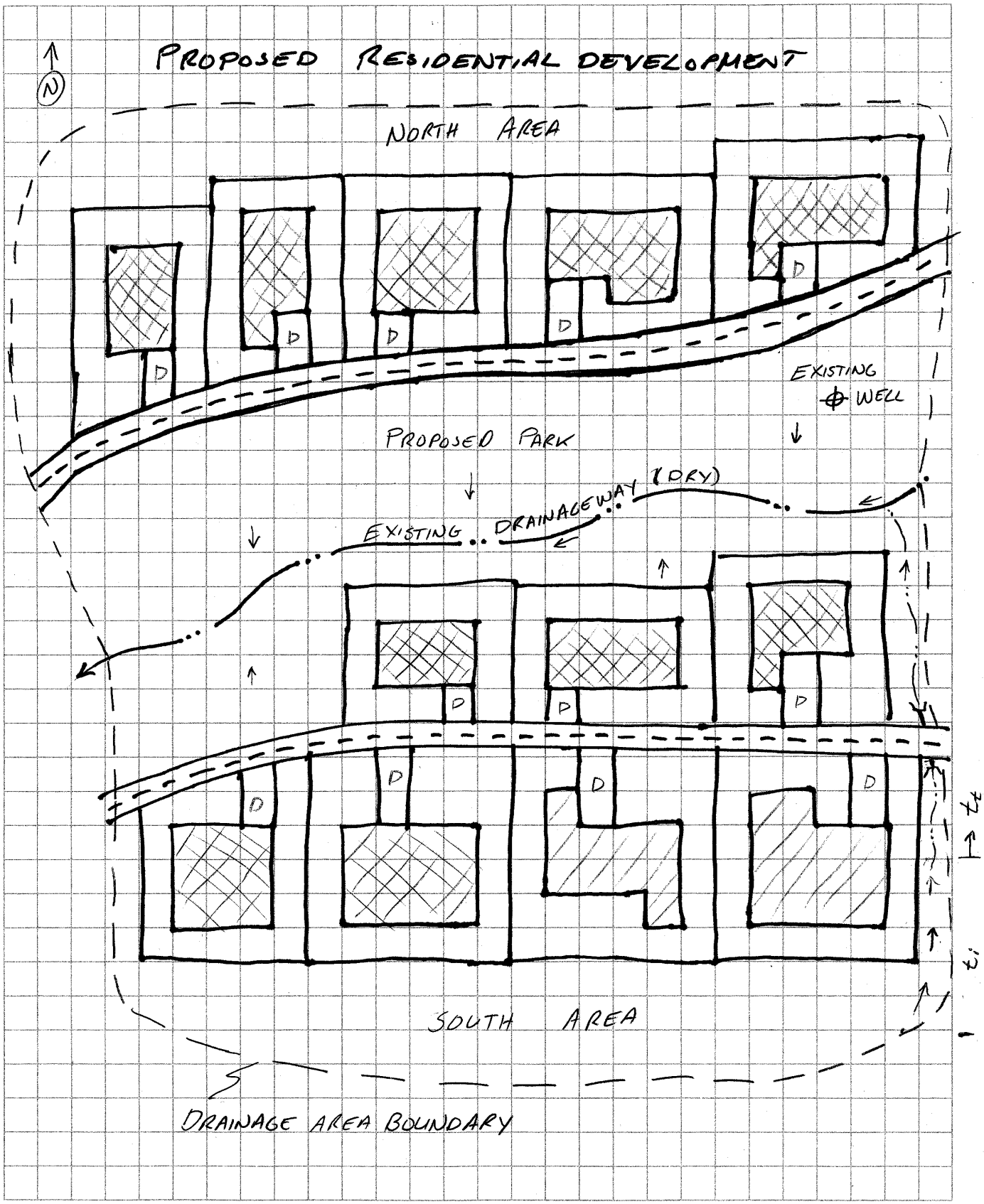

3) CALCULATE WQ_F (SEE SECTION 3.2.1)

$Q = CIA$ $A = 6$ acres

TABLE 3-1

$13{,}050 + 3{,}600 + 31{,}200 = 47{,}850\,ft^2 = 1.1\,ac$ $C = 0.88$

Assume: 2.5 acres irrigated grass & vegetation $C = 0.10$
Landscaping includes ~15% decorative rocks)
2.4 acres Native range $C = 0.20$

$$C_{COMP} = \frac{(0.88)(1.1) + (2.5)(0.10) + (2.4)(0.20)}{6\,ac} = 0.28$$

USING EQUATIONS 701 & 702 FROM THE SPARKS HYDROLOGIC CRITERIA AND DRAINAGE DESIGN MANUAL - FIND t_c

$t_c = t_i + t_t$

$R = C = 0.20$ (for range - Table 3-1)
$L = 150'$ of overland flow (assumed)
$S = 5\%$ from grading plan

$$t_i = \frac{1.8(1.1-R)L^{1/2}}{S^{1/3}}$$

$$t_i = \frac{1.8(1.1-0.2)\,150^{1/2}}{5^{1/3}} = 11.6\text{ min}$$

$$t_t = \frac{L}{60V}$$ $V = 1.25$ ft/sec

for Alluvial Fans & Western Mtns
Figure 701 Sparks HC Manual
Ave slope 2.5%
Assume $L = 827$ ft - channel flow

$$t_t = \frac{827}{60(1.25)} = 11.0\text{ min}$$

$t_i + t_t = 11.6 + 11.0 = 22.6$ min

Compare to eqn 704 Sparks HC manual $t_c = \frac{L}{180} + 10$

where $L = 150 + 827$ $t_c = \frac{977}{180} + 10 = 15.4$ min

Since eqn 704 give a smaller value $t_c = \underline{15.4\text{ min}}$

ASSUME PROJECT LOCATED IN REGION 1 IN SPARKS

PER FIGURE 605 SPARKS HC MANUAL $I_2 = 0.8$ in/hr for 2 yr storm

$WQ_F = C_{comp} I_2 A$ $I_5 = 1.1$ in/hr for 5 yr storm

$= (0.28)(0.8)(6.0)$ $I_{25} = 1.9$ in/hr for 25 yr storm

$= 1.34$ cfs $I_{100} = 2.9$ in/hr 100 yr storm

$Q_{100} = (0.28)(2.9)(6.0) = 4.87$ cfs

4). SIZE BOTTOM WIDTH OF GRASSY SWALE
Assume a Natural appearing channel
with mixed vegetation and rounded rocks: Manning's $n = 0.040$

Assume trapezoidal with 4:1 side slopes (minimum)

$WQ_F = \left(\frac{1.49}{n}\right) A R^{2/3} S^{1/2}$ S = Slope = 2.5%

Using a hydraulics program such as FlowMaster
and assuming a desired depth of 3" at the WQ_F
Bottom Width = 1.8 ft use 2 ft
(see attachments)

* Assume flows from upstream watershed will be attenuated by an upstream flood control structure to 15 cfs for the 100-year storm

5) CALC CHANNEL DEPTH FOR 100-yr STORM

$Q_{100} = 4.87 + 15 = 19.87$ cfs

Per attached worksheet depth = 0.91 ft
Add 1' freeboard - Assume min channel depth = 2.0 ft

Worksheet
Worksheet for Trapezoidal Channel

Project Description	
Worksheet	Trapezoidal Channel - 1
Flow Element	Trapezoidal Channel
Method	Manning's Formula
Solve For	Bottom Width

Input Data		
Mannings Coefficient	0.040	
Slope	2.5000	%
Depth	0.25	ft
Left Side Slope	4.00	H : V
Right Side Slope	4.00	H : V
Discharge	1.34	cfs

Results		
Bottom Width	1.84	ft
Flow Area	0.7	ft²
Wetted Perimeter	3.90	ft
Top Width	3.84	ft
Critical Depth	0.22	ft
Critical Slope	4.3474	%
Velocity	1.89	ft/s ✓ OK
Velocity Head	0.06	ft
Specific Energy	0.31	ft
Froude Number	0.77	
Flow Type	Subcritical	

Worksheet
Worksheet for Trapezoidal Channel

Project Description	
Worksheet	Trapezoidal Channel - 1
Flow Element	Trapezoidal Channel
Method	Manning's Formula
Solve For	Channel Depth

Input Data		
Mannings Coefficient	0.040	
Slope	2.5000	%
Left Side Slope	4.00	H : V
Right Side Slope	4.00	H : V
Bottom Width	2.00	ft
Discharge	19.87	cfs

Results		
Depth	0.91	ft
Flow Area	5.1	ft²
Wetted Perimeter	9.48	ft
Top Width	9.26	ft
Critical Depth	0.87	ft
Critical Slope	2.9664	%
Velocity	3.89	ft/s
Velocity Head	0.24	ft
Specific Energy	1.14	ft
Froude Number	0.92	
Flow Type	Subcritical	

Exceeds Maximum Permissible Velocity for unlined channels
Recomend the use of a TRM (Turf Reinforcement Mat) with irrigated vegetation. Reccomended TRM width = 10 ft

Cross Section
Cross Section for Trapezoidal Channel

Project Description	
Worksheet	Trapezoidal Channel - 1
Flow Element	Trapezoidal Channel
Method	Manning's Formula
Solve For	Channel Depth

Section Data		
Mannings Coefficient	0.040	
Slope	2.5000	%
Depth	0.91	ft
Left Side Slope	4.00	H : V
Right Side Slope	4.00	H : V
Bottom Width	2.00	ft
Discharge	19.87	cfs

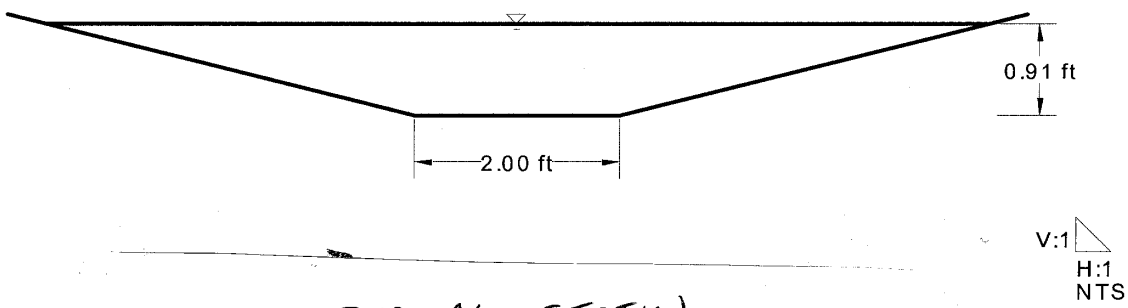

TYPICAL SECTION

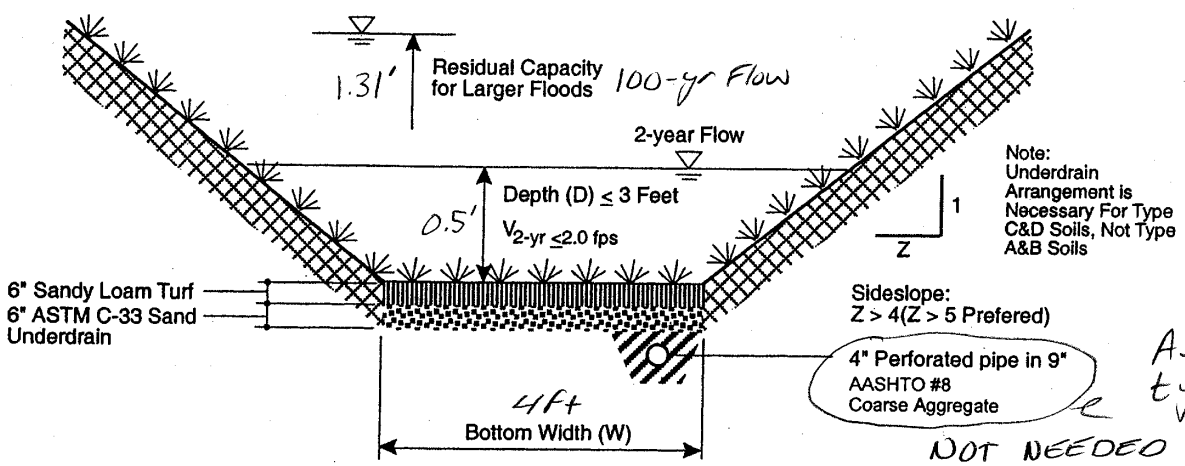

Assume type B soils

NOT NEEDED

TRAPEZOIDAL GRASS-LINED SWALE SECTION
NOT TO SCALE

* OPTIONAL - PROVIDED AS A DESIGN EXAMPLE ONLY

6) DESIGN EXTENDED DETENTION BASIN

- Located at end of grassy swale
- Determine $WQv = \frac{P R_v A}{12}$ $R_v = 0.05 + 0.009I$

per page 1 assume 47,850 ft² impervious = 1.1 acres

$1.1/6 = 0.183 = 18.3\%$ $R_v = 0.05 + 0.009(18.3) = 0.22$

$$WQv = \frac{(0.6)(0.22)(6 \times 43{,}560\ ft^2/acre)}{12} = 2{,}875\ ft^3$$

* BASED ON UPSTREAM FLOOD CONTROL FACILITIES AND THE CAPACITY OF THE PROPOSED DRAINAGE SWALE (e.g. grassy swale), THE CITY ENGINEER HAS DETERMINED THAT DETENTION OF THE 5-YEAR STORM EVENT IS NOT REQUIRED

Per fact sheet TC-40, the basin should be designed to hold 120% of the WQv, have a length to width ratio of 3:1, and a depth of 2-5 ft. (assume 3 ft depth)

$(WQv)(1.20) = 3450\ ft^3 / 3 = 1{,}150\ ft^2$ = surface area

A detention pond approximately 44 ft long x 14 ft wide x 3 ft deep with 4H:1V side slopes will provide approx. 3450 ft³ of storage

7) DESIGN OUTLET STRUCTURE

* Design the structure (dam and outlet) for a residential park with aesthetics and safety in mind

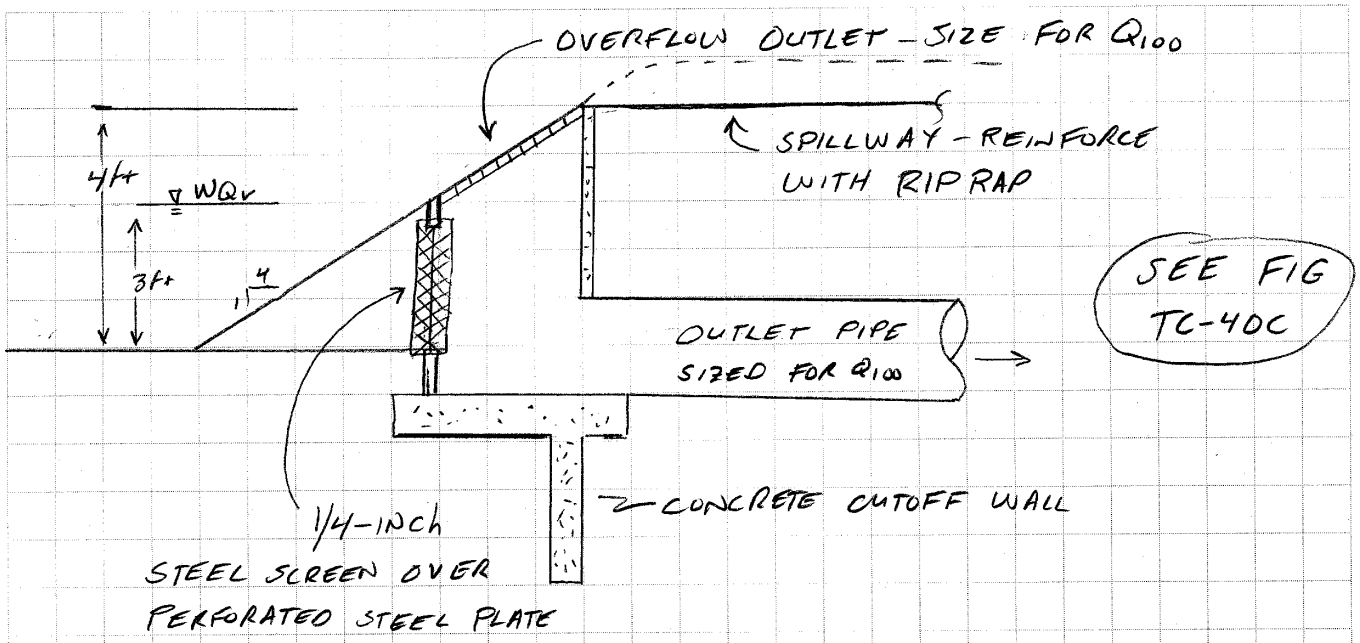

8) DETERMINE THE SIZE AND NUMBER OF PERFORATIONS FOR THE OUTLET STRUCTURE

Per fact sheet TC-40 use $A_o = WQv / K$

where A_o = Perforation area per row (in^2)

$WQv = 3450 / 43{,}560 = 0.079$ acre-ft

$K = 0.013 D_{WQ}^2 + 0.22 D_{WQ} - 0.10$

D_{WQ} = WQv depth = 3 ft

$K = 0.68$ $A_o = 0.12\ in^2 \cong 1/8''$ diameter perf

Determine the number of rows (# of holes) using

$nr = 1 + (12 D_{WQ} / 3)$ where D_{WQ} is in inches

$nr = 1 + (36/3) = 13$ row

Therefore install 13 holes in one column spaced 3 inches apart

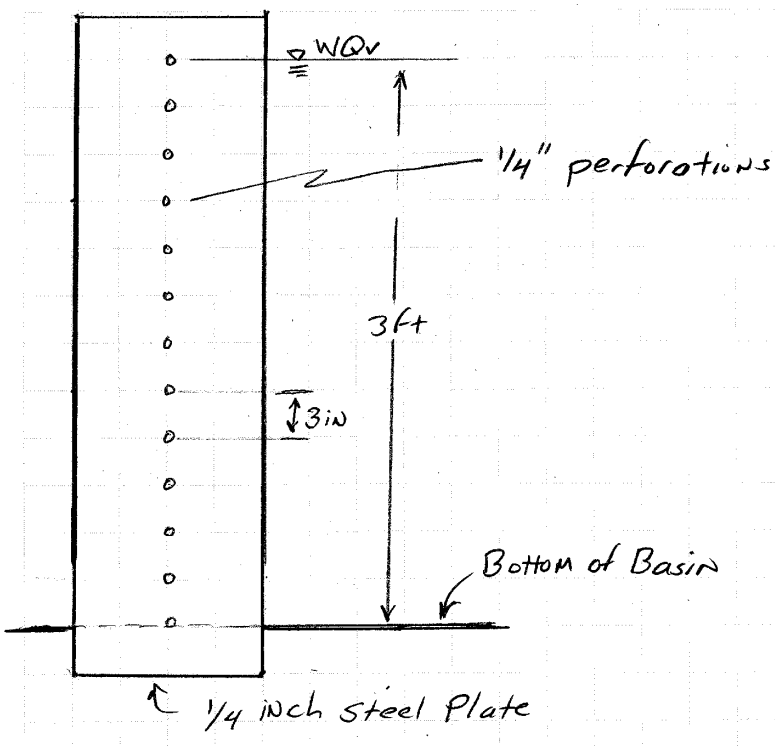

9) DESIGN OVERFLOW OUTLET FOR Q_{100}

Per Step 5 $Q_{100} = 19.87$ cfs use 20 cfs

Use orifice equation (3-6) $Q_{100} = C_d A (2gh_d)^{1/2}$

where h_d = height of water above midpoint for design shown on page 9 $h_d = 0.5$ ft

$$A = \frac{Q_{100}}{C_d (2gh_d)^{1/2}} = \frac{20}{(0.65)(2 \times 32.2 \times 0.5)^{1/2}} = 5.42 \text{ ft}^2$$

Use a standard 2'x3' catch basin grate

10) SIZE EMERGENCY SPILLWAY

Use broad-crested weir equation (3-5) to determine width of weir (L)

$Q_{100} = CLh^{1.5}$

Assume $h = 1.0$ ft
$Q_{100} = 20$ cfs
$C = 3.0$

$$L = \frac{20}{(3.0)(1.0)^{1.5}} = 6.7 \text{ ft} \quad \text{use } 7 \text{ ft}$$

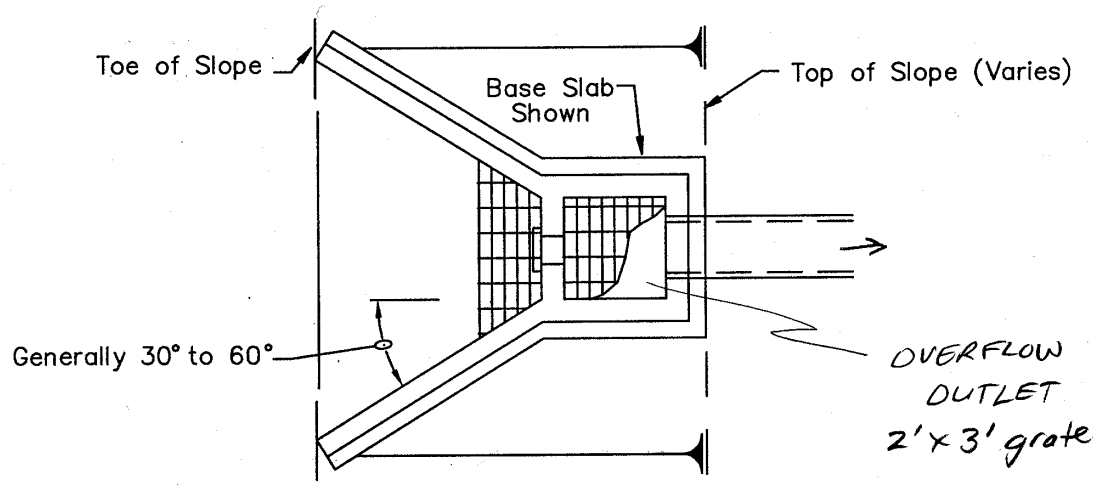

WINGWALL OPTION AT OUTLET STRUCTURE

By CJC Date 1/16/04 Subject EXTENDED DETENTION BASIN Job No. _____
Checked By JBL Date 01/19/04 Sheet 12 of 12

11) INCLUDE A LOW FLOW CHANNEL, A MAINTENANCE ACCESS RAMP, AND OUTLET PROTECTION SIMILAR TO THAT SHOWN BELOW

* SINCE A GRASS SWALE HAS BEEN PROVIDED UPSTREAM A PRESEDIMENTATION FOREBAY MAY NOT BE NEEDED

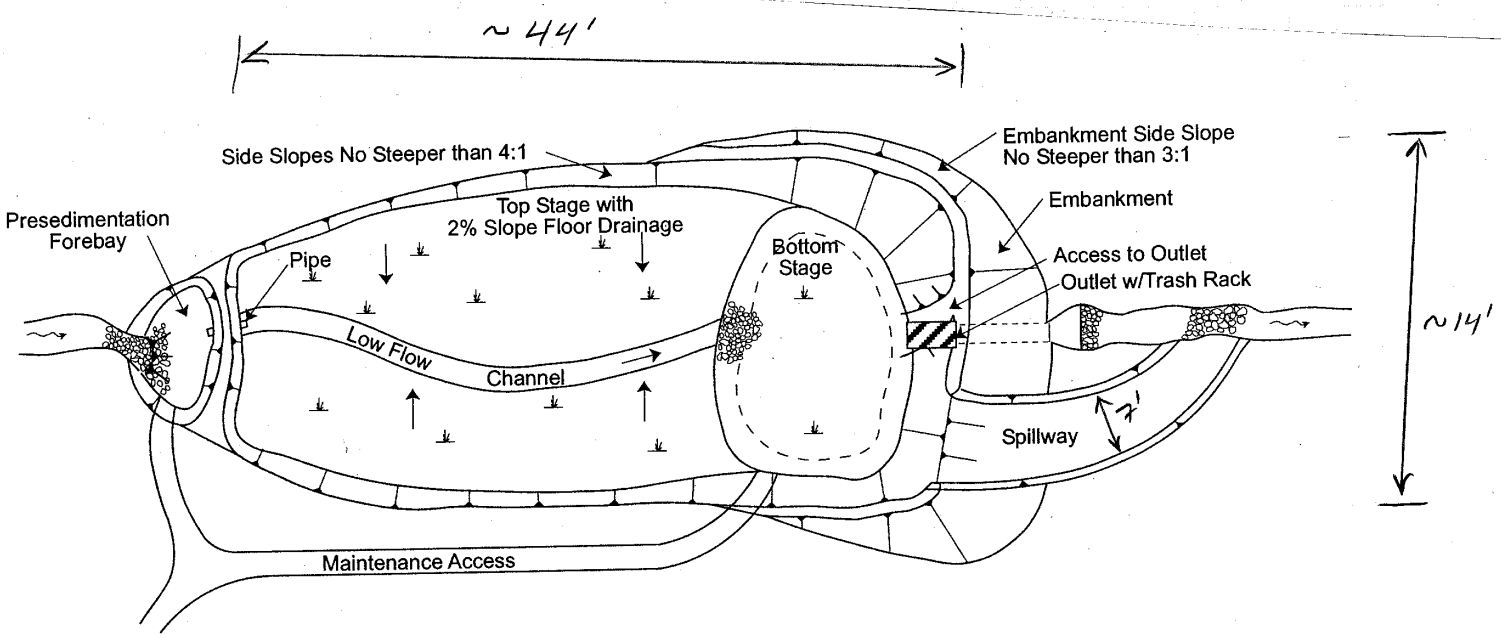

PLAN
NOT TO SCALE

Appendix C

Truckee Meadows Design Guidance Worksheets

TRUCKEE MEADOWS DESIGN GUIDANCE WORKSHEETS - INTRODUCTION

Version 1.01 Released April 2007

Truckee Meadows Regional Storm Water Quality Management Program

Purpose:	**This workbook is to be used as a design aid in the preliminary stages of BMP design for Structural Treatment Controls and Low Impact Development (LID) Practices**
Function:	**To provide the designer with built-in tools that incorporate established criteria and sizing into the preliminary design of BMPs to improve storm water quality.**
Content:	**The workbook consists of the following sheets:**
SUMMARY	Describes the project area and each subbasin
DISCLAIMER	
TC-10	Design-aid for Swales
TC-11	Design-aid for Buffer Strips
TC-20	Design-aid for Infiltration Trenches
TC-21	Design-aid for Infiltration Basins
TC-30	Design-aid for Landscape Detention (Bioretention) Basins
TC-40	Design-aid for Sedimentation Basins
TC-41	Design-aid for Sand Filter Basins
TC-50	Design-aid for Storm Water Ponds
TC-51	Design-aid for Storm Water Wetlands
TC-60	Design-aid for Surface Sand Filters
TC-61(a)	Design-aid for Underground Sand Filters - D.C. Type
TC-61(b)	Design-aid for Underground Sand Filters - Delaware Type
TC-62(a)	Design-aid for Porous Pavement Detention
TC-62(b)	Design-aid for Open-Celled Block Pavers
TC-62(c)	Design-aid for Open-Jointed Block Pavers
TC-62(d)	Design-aid for Porous Asphalt and Concrete Pavement
TC-62(e)	Design-aid for Porous Turf
TC-62(f)	Design-aid for Porous Gravel
TC-62(g)	Design-aid for Open-Celled Plastic Grids
Comments?	Direct all comments regarding this spreadsheet workbook to: Email Storm Water Program Coordinator, P.O. Box 1900, Reno, NV 89505
Revisions?	Check for revised versions of this workbook at: TMstormwater.com

Original workbook developed by and used with the permission of the Urban Drainage and Flood Control District (UDFCD) in Denver, Colorado. The original workbook was modified and adapted for the Truckee Meadows Regional Storm Water Quality Management Program by Kennedy/Jenks Consultants, February, 2007.

Disclaimer

The Truckee Meadows Structural Controls Design Manual and its associated fact sheets (the Manual) and Design Guidance Worksheets have been developed and reviewed using a high standard of professional care for identification of errors, bugs, and other related issues. As with the release of any new publication, details and software driven products, it is likely that some nonconformities, defects, bugs, errors or omissions will be discovered. The developers of the Manual and the Design Guidance Worksheets welcome user feedback in helping to identify any problems so that improvements can be made to future releases. Please check the Truckee Meadows Regional Stormwater Quality Management Program website (**www.TMstormwater.com**) for contact information to supply user feedback and information on updates and revisions.

The Manual and the Design Guidance Worksheets are intended to assist with the consistent design and review of structural treatment controls and Low Impact Development (LID) practices that reduce pollutant loadings and the volume and rate of urban runoff to receiving waters such as the Truckee River and its tributaries. The details and design standards provided in the Manual and Design Guidance Worksheets are intended to show design concepts. Preparation of final design plans, addressing details of structural adequacy, public safety, hydraulic functionality, maintainability, plant and soils specifications and aesthetics, remain the sole responsibility of the designer. To be effective, it is recommended that structural treatment controls and LID practices are planned and designed concurrently with drainage and flood control facilities. Engineers and landscape architects are also encouraged to work together in the design of LID practices that include soil amendments and vegetation (e.g. buffers, swales and bioretention basins).

BY THE USE OF THE TRUCKEE MEADOWS STRUCTURAL CONTROLS DESIGN MANUAL ITS ASSOCIATED FACT SHEETS AND DESIGN GUIDANCE WORKSHEETS THE USER AGREES TO THE FOLLOWING:

NO WARRANTY
The City of Reno, the City of Sparks and Washoe County, its contractors, advisors, or reviewers, do not warrant that the Manual and the Design Guidance Worksheets will meet the users requirements, or that the use of these products will be uninterrupted or error free.

NO LIABILITY FOR DAMAGES
To the maximum extent permitted by applicable law, in no event shall the City of Reno, the City of Sparks and Washoe County, its staff, consultants, contractors, advisors, or reviewers, be liable for any damages whatsoever, whether, general, incidental, special, punitive, exemplary, or consequential (including, without limitation, damages for any liabilities, losses, claims, actions or proceedings, reasonable attorneys' fees, loss of business profits, business interruption, loss of business information or other pecuniary loss) arising out of the use or inability to use these products.
The City of Reno, the City of Sparks and Washoe County do not waive and intend to assert available defenses and limitations contained in Chapter 41 of the Nevada Revised Statutes.

THE USE OF THE TRUCKEE MEADOWS STRUCTURAL CONTROLS DESIGN MANUAL ITS ASSOCIATED FACT SHEETS AND DESIGN GUIDANCE WORKSHEETS ARE PROVIDED "AS IS" AND THE CITY OF RENO, THE CITY OF SPARKS AND WASHOE COUNTY, ITS CONTRACTORS, ADVISORS, AND REVIEWERS DISCLAIM ALL WARRANTIES OF ANY KIND, EITHER EXPRESSED OR IMPLIED, INCLUDING BUT NOT LIMITED TO, ANY WARRANTY OF MERCHANTABILITY, FITNESS FOR A PARTICULAR PURPOSE, PERFORMANCE LEVELS, COURSE OF DEALING OR USAGE IN TRADE.

Truckee Meadows Regional Storm Water Quality Management Program
Project Summary Worksheet

Designer:
Company:
Date: May 4, 2007
Project Name:
Location:

Project Area (acres):

Type of Development (new or redevelopment):

Total Area of New or Additional Impervious Surfaces (acres):

Type of Site Use (residential/commercial/industrial):

Storm Water Run-on to Project Area From Offsite (yes/no):

Is a Seasonal or Permanent Water Feature Onsite (yes/no):

Type (stream, spring, etc.) :

Average Site Slope (%):

Are Municipal Stormwater Collection/ Conveyance Facilities Nearby (yes/no):

Average Depth To Groundwater:

Date Measured:

Hazardous Materials to be Used/Stored Onsite (if known)

Material #1: Quantity:

Material #2: Quantity:

Material #3: Quantity:

Material #4: Quantity:

Material #5: Quantity:

Total Number of Drainage Subbasins:

Subbasin #1:
Total Area (acres):
Impervious Area (acres):
Percent Impervious:
Runoff Coefficient:
NRCS Soil Type (i.e. A,B,C,D):
Is Infiltration Proposed? (Y/N):
Percolation Testing Been Conducted? (Y/N)

Subbasin #2:
Total Area (acres):
Impervious Area (acres):
Percent Impervious:
Runoff Coefficient:
NRCS Soil Type (i.e. A,B,C,D):
Is Infiltration Proposed? (Y/N):
Percolation Testing Been Conducted? (Y/N)

Subbasin #3:
Total Area (acres):
Impervious Area (acres):
Percent Impervious:
Runoff Coefficient:
NRCS Soil Type (i.e. A,B,C,D):
Is Infiltration Proposed? (Y/N):
Percolation Testing Been Conducted? (Y/N)

Subbasin #4:
Total Area (acres):
Impervious Area (acres):
Percent Impervious:
Runoff Coefficient:
NRCS Soil Type (i.e. A,B,C,D):
Is Infiltration Proposed? (Y/N):
Percolation Testing Been Conducted? (Y/N)

Subbasin #5:
Total Area (acres):
Impervious Area (acres):
Percent Impervious:
Runoff Coefficient:
NRCS Soil Type (i.e. A,B,C,D):
Is Infiltration Proposed? (Y/N):
Percolation Testing Been Conducted? (Y/N)

Describe any additional subbasins on additional sheets, as necessary.

Notes:

continue to next page if there are more than 5 subbasins

Truckee Meadows Regional Storm Water Quality Management Program
Project Summary Worksheet

Designer:

Company:

Date: May 4, 2007

Project:

Location:

Subbasin #6:
Total Area (acres):
Impervious Area (acres):
Percent Impervious:
Runoff Coefficient:
NRCS Soil Type (i.e. A,B,C,D):
Is Infiltration Proposed? (Y/N):
Percolation Testing Been Conducted? (Y/N)

Subbasin #7:
Total Area (acres):
Impervious Area (acres):
Percent Impervious:
Runoff Coefficient:
NRCS Soil Type (i.e. A,B,C,D):
Is Infiltration Proposed? (Y/N):
Percolation Testing Been Conducted? (Y/N)

Subbasin #8:
Total Area (acres):
Impervious Area (acres):
Percent Impervious:
Runoff Coefficient:
NRCS Soil Type (i.e. A,B,C,D):
Is Infiltration Proposed? (Y/N):
Percolation Testing Been Conducted? (Y/N)

Subbasin #9:
Total Area (acres):
Impervious Area (acres):
Percent Impervious:
Runoff Coefficient:
NRCS Soil Type (i.e. A,B,C,D):
Is Infiltration Proposed? (Y/N):
Percolation Testing Been Conducted? (Y/N)

Subbasin #10:
Total Area (acres):
Impervious Area (acres):
Percent Impervious:
Runoff Coefficient:
NRCS Soil Type (i.e. A,B,C,D):
Is Infiltration Proposed? (Y/N):
Percolation Testing Been Conducted? (Y/N)

Notes:

end of worksheet

Truckee Meadows Regional Storm Water Quality Management Program
Design Guidance Worksheet: Swales TC-10

*** Fill out worksheet from top to bottom** — **Version 1.01 Released April 2007**

Designer:
Company:
Date: May 4, 2007
Project:
Location:

Subbasin #

Key:	User Input	Calculated Result	***Italicized Font Indicates Value is Outside Recommended Range***

1. Water Quality Flow Rate

a) Rainfall Intensity = I (2-year storm - determine using site location and appropriate City or County drainage design manual) — I = ____ in/hr

b) List City or County name and Rainfall Region — ____

c) Drainage Area = A (acres) (43,560 ft^2 = 1 acre) - maximum drainage area is 10 acres — A = ____ acres

d) Runoff Coefficient of Contributing Drainage Area = C — C = ____

e) 2-Year Design Discharge = WQ_F (cfs) — WQ_F = ____ cfs

2. Swale Geometry

a) Channel Side Slopes (max 4H:1V or flatter) — H:V = 4 :1

b) 2-Year Design Flow Depth (D_2, 3' maximum) — D_2 = ____ ft

c) Bottom Width (BW) of Trapezoidal Channel (2' minimum, 10' maximum), **or** Top Width (TW) of Parabolic Channel — BW = ____ ft; TW = ____ ft

b) Length of Swale (L_S, ft, 100' minimum) — L_S = ____ ft

3. Longitudinal Slope

a) Design Slope (S, 0.5% minimum, 2.5% maximum) — S = ____ %

b) 2-Year Design Flow Velocity (V_2, 2.0 ft/sec maximum) — V_2 = ____ ft/sec

[X] If Checked, Required Design = Install 4" diameter PVC underdrain system

4. Vegetation (Check **"x"** the type used or describe "Other")
(Vegetation height of 4 - 6" is recommended)

- [ ] Dryland Grass
- [ ] Irrigated Turf Grass
- [ ] Other: ____

5. Outlet (Check **"x"** the type used or describe "Other")
First answer question below, then proceed to right if unchecked
Check "x" if soils are C or D type soils? ____
(A 4" diameter PVC underdrain should be provided in C and D type soils to minimize standing water)

- [x] **Underdrain required if checked**
- [ ] Grated Inlet
- [ ] Other: ____

Notes:

Original worksheet developed by and used with the permission of the Urban Drainage and Flood Control District (UDFCD) in Denver, Colorado. The original worksheet was modified and adapted for the Truckee Meadows Regional Storm Water Quality Management Program by Kennedy/Jenks Consultants.

end of worksheet

Truckee Meadows Regional Storm Water Quality Management Program
Design Guidance Worksheet: Vegetated Buffer Strips TC-11

*** Fill out worksheet from top to bottom** — **Version 1.01 Released April 2007**

Designer:
Company:
Date: May 4, 2007
Project:
Location:

Subbasin #

Key: User Input | Calculated Result | ***Italicized Font Indicates Value is Outside Recommended Range***

1. Water Quality Flow Rate

a) Rainfall Intensity = I (2-year storm - determine using site location and appropriate City or County drainage design manual) — I = ____ in/hr

b) List City or County name and Rainfall Region

c) Drainage Area = A (acres) (43,560 ft^2 = 1 acre) — A = ____ acres
- maximum drainage area is 5 acres

d) Runoff Coefficient of Contributing Drainage Area = C — C = ____

e) 2-Year Design Discharge = WQ_F (cfs) — WQ_F = ____ cfs

2. Drainage Area Flow

a) Design Length (Normal to runoff flow path): $L_G = WQ_F / 0.05$ — L_G = ____ ft

3. Design Width Along Direction of Flow
Use method (a) OR (b) below - use only one method
a) Sheet Flow Control Level Spreader
i) Length of Flow Path Over Upstream Impervious Drainage Area — L_L = ____ ft
ii) Design Width of Buffer Strip: $W_G = 0.2 * L_L$ (8' minimum) — W_G = ____ ft

b) Concentrated (Non-Sheet) Flow Control Level Spreader
(requires a level spreader in step 5 below)
i) Length of Drainage Area (normal to flow) adjacent to buffer strip — L_t = ____ ft
ii) Design Width of Buffer: $W_G = 0.15 * A / L_t$ (8' minimum) — W_G = ____ ft

4. Design Slope (should not exceed 4%) — S = ____ %

5. Flow Distribution (Check "x" the type used or describe "Other")

Note: If Method b was Used In Step 3, Level Spreader Will Be Checked Here

- ____ Slotted Curbing
- ____ Modular Block Porous Pavement
- ____ Level Spreader
- ____ Other: ____

6. Vegetation (Check "x" the type used or describe "Other")
Note: Irrigation required during the dry season for vegetated buffer strips

- ____ Irrigated Turf Grass
- ____ Other: ____

7. Outflow Collection (Check "x" the type used or describe "Other")

- ____ Grass Lined Swale
- ____ Street Gutter
- ____ Storm Sewer Inlet
- ____ Underdrain Used
- ____ Other: ____

Notes:

Original worksheet developed by and used with the permission of the Urban Drainage and Flood Control District (UDFCD) in Denver, Colorado. The original worksheet was modified and adapted for the Truckee Meadows Regional Storm Water Quality Management Program by Kennedy/Jenks Consultants.

end of worksheet

Truckee Meadows Regional Storm Water Quality Management Program
Design Guidance Worksheet: Infiltration Trenches TC-20

*** Fill out worksheet from top to bottom**

Version 1.01 Released April 2007

Designer:

Company:

Date: May 4, 2007

Project:

Location:

Subbasin #

Key: User Input | Calculated Result | ***Italicized Font Indicates Value is Outside Recommended Range***

1. Water Quality Volume (WQ_v) - Infiltration Trench Storage

a) Percent of Watershed Impervious Area = I	I = ____ %
b) Drainage Area = A (ft^2) (43,560 ft^2 = 1 acre) - maximum drainage area 5 acres	A = ____ acres
c) Watershed Runoff Coefficient = R_v (unitless)	R_v = ____
d) 90th Percentile Precipitation Depth = P (inches)	P = ____ in
e) Water Quality Volume = WQ_V (ft^3)	WQ_V = ____ ft^3

2. Infiltration Trench Dimensions

a) Surface Area (SA) of Trench	SA = ____ ft^2
b) Porosity (void space of rock matrix) (unitless)	____
c) Total Trench Voume = V_T	V_T = ____ ft^3
d) Depth of Trench = D (recommended min 3 feet, max 6 feet)	D = ____ ft

3. Infiltration Trench Floor Slope
not to exceed 1%

____ %

Notes:

Original worksheet developed by and used with the permission of the Urban Drainage and Flood Control District (UDFCD) in Denver, Colorado. The original worksheet was modified and adapted for the Truckee Meadows Regional Storm Water Quality Management Program by Kennedy/Jenks Consultants.

end of worksheet

Truckee Meadows Regional Storm Water Quality Management Program
Design Guidance Worksheet: Infiltration Basin TC-21

*** Fill out worksheet from top to bottom** — **Version 1.01 Released April 2007**

Designer:

Company:

Date: May 4, 2007

Project:

Location:

Subbasin #

Key: User Input | Calculated Result | ***Italicized Font Indicates Value is Outside Recommended Range***

1. Water Quality Volume (WQ_v) - Landscape Detention Basin Storage	
a) Percent of Watershed Impervious Area = I	I = ____ %
b) Drainage Area = A (acres) (43,560 ft^2 = 1 acre) - maximum drainage area 5 acres	A = ____ acres
c) Watershed Runoff Coefficient = R_v (unitless)	R_v = ____
d) 90th Percentile Precipitation Depth = P (inches)	P = ____ in
e) Water Quality Volume = WQ_V (ft^3)	WQ_V = ____ ft^3
2. Infiltration Basin Data	
a) Field Measured Hydraulic Conductivity = K_h (in/hr)	K_h = ____ in/hrs
b) Minimum Drain Time = t (48 hours minimum)	t = ____ hrs
c) Basin Invert Area = A = $WQ_v/(0.5K_h \times t)$	A = ____ ft^3
4. Basin Side Slopes (H:V = 3:1 or flatter)	H:V= ____ :1
5. Basin floor slope not to exceed 5%	____ %

Notes:

Original worksheet developed by and used with the permission of the Urban Drainage and Flood Control District (UDFCD) in Denver, Colorado. The original worksheet was modified and adapted for the Truckee Meadows Regional Storm Water Quality Management Program by Kennedy/Jenks Consultants.

end of worksheet

Truckee Meadows Regional Storm Water Quality Management Program
Design Guidance Worksheet: Landscape Detention (Bioretention) TC-30

*** Fill out worksheet from top to bottom** — **Version 1.01 Released April 2007**

Designer:

Company:

Date: May 4, 2007

Project:

Location:

Subbasin #

Key: User Input | Calculated Result | ***Italicized Font Indicates Value is Outside Recommended Range***

1. Water Quality Volume (WQ_v) - Landscape Detention Basin Storage

a) Percent of Watershed Impervious Area = I — I = ____ %

b) Drainage Area = A (acres) (43,560 ft^2 = 1 acre) — A = ____ acres
- drainage area 1 acre maximum

c) Watershed Runoff Coefficient = R_v (unitless) — R_v = ____

d) 90th Percentile Precipitation Depth = P (inches) — P = ____ in

e) Water Quality Volume = WQ_V (ft^3) — WQ_V = ____ ft^3

2. Landscape Detention Basin Dimensions

a) Surface Area (SA) of basin — SA = ____ ft^2

b) Ponding Depth = D_{WQV} (6-inch minimum, 12-inch maximum) — D_{WQV} = ____ in

3. Site Soils, Drainage Area Characteristics and Drainage Requirements

Answer ALL questions 3a to 3e to determine design requirements

Check "x" only one appropriate box based on following criteria

a) Subgrade is a heavy or expansive clay ____
b) Subgrade is a silty or clayey sand ____
c) Subgrade is a well-draining soil ____

Answer Yes (Y) or No (N) to the following question

d) Does tributary drainage area have land uses with outdoor use or storage of chemicals or materials that could spill (e.g. a gas station, a hardware store, etc.)? "y" or "n" ____

e) **Check "x" box if no storm drain system is available** ____
(e.g. downgradient storm drain pipe or drainage)

____ 3c = x **and** 3d = N
Design = Infiltration with Permeable Fabric Liner

____ 3b = x **and** 3d = N
Design = Underdrain with Permeable Fabric Liner

____ 3a = x **or** 3d = Y
Design = Underdrain with Impermeable Liner

____ 3a **or** 3b =x **and** 3e = x
(DO NOT USE TC-30 unless underdrain can be constructed to an alternative drainage feature)

4. Infiltration Testing

If infiltration proposed, percolation testing required
a) Site infiltration testing conducted ("Y" **or** "N") ____
b) Test results: Ave infiltration rate at basin depth = ____ in/hr
Note: Minimum infiltration rate without an underdrain = 0.5 in/hr

____ Other: ____

5. Engineered Soil Mixture and Liner Requirements

a) Clean Sand (50-65%), Peat or Certified Compost (5-20%), and Topsoil and Mulch (20-30%)

as above with an 8" Clean Coarse Aggregate subbase

as above with an 8" Clean Coarse Aggregate subbase

b) Other

____ Use 18" minimum depth sand/peat mix, **no** underdrain pipe required if well-drained soils

____ Use 18" minimum depth sand/peat mix **with** an underdrain pipe to storm drain system

____ Use 18" minimum depth sand/peat mix with an impermeable liner

____ Other: ____

Notes:

Original worksheet developed by and used with the permission of the Urban Drainage and Flood Control District (UDFCD) in Denver, Colorado. The original worksheet was modified and adapted for the Truckee Meadows Regional Storm Water Quality Management Program by Kennedy/Jenks Consultants.

end of worksheet

Truckee Meadows Regional Storm Water Quality Management Program
Design Guidance Worksheet: Sedimentation Basin TC-40

*** Fill out worksheet from top to bottom** — **Version 1.01 Released April 2007**

Designer: _____

Company: _____

Date: May 4, 2007

Project: _____

Location: _____

Subbasin # _____

Key: User Input | Calculated Result | ***Italicized Font Indicates Value is Outside Recommended Range***

1. Water Quality Volume (WQ_v) - Sedimentation Basin Storage	
a) Percent of Watershed Impervious Area = I	I = _____ %
b) Drainage Area = A (acres) (43,560 ft^2 = 1 acre) - minimum drainage area of 5 acres	A = _____ acres
c) Watershed Runoff Coefficient = R_v (unitless)	R_v = _____
d) 90th Percentile Precipitation Depth = P (inches)	P = _____ in
e) Water Quality Volume = WQ_v (ft^3)	WQ_v = _____ ft^3
2. Outlet Structure	
a) Outlet Type (Check "x" One)	____ Orifice Plate ____ Perforated Riser Pipe ____ Other: _____
b) Depth of water above the centerline of the bottom row of perforations (D_{BS}, 2' max.)	D_{BS} = _____ feet
c) Required Maximum Outlet Area per Row = A_o	A_o = _____ in^2
d) Number of Columns	nc = _____ number
e) Number of Rows = nr	nr = _____ number
f) Total Area of Each Perforation = A_{perf}	A_{perf} = _____ in^2
3. Detention Basin length to width ratio (minimum L:W = 2:1)	L:W = _____ :1
4. Pre-sedimentation Forebay Basin - Enter design values	
a) Volume	_____ ft^3
b) Surface Area	_____ ft^2
c) Connector Pipe Diameter (Size to drain this volume in 5-minutes under inlet control)	_____ in
d) Paved/Hard Bottom and Sides	_____ yes(y) or no(n)
5. Basin Sizing	
a) Basin Top Stage Depth (Depth D_{WQ} = 2' Minimum)	D_{WQ} = _____ ft Storage= _____ ft^3
b) Micro Pool (Minimum Depth = the Larger of 0.5 * Top Stage Depth or 2.5 Feet)	Depth= _____ ft
c) Total Volume: Vol_{tot} = Storage from 4A + 5A	Vol_{tot} = _____ ft^3

continue to next page

Truckee Meadows Regional Storm Water Quality Management Program
Design Guidance Worksheet: Sedimentation Basin TC-40

Designer: _____ **page 2 of 2**

Company: _____

Date: May 4, 2007

Project: _____ **Subbasin #** _____

Location: _____

6. Basin Side Slopes (side-slopes within sedimentation basin) H:V = horizontal distance per unit vertical (minimum 4:1, flatter preferred)	H:V = _____ :1
7. Dam Embankment Side Slopes (exterior side slopes) H:V = horizontal distance per unit vertical, (minimum 3:1, flatter preferred)	H:V = _____ :1
8. Vegetation (Check "x" the method or describe "Other")	____ Native Grass ____ Irrigated Turf Grass ____ Other: _____

Notes:

Original worksheet developed by and used with the permission of the Urban Drainage and Flood Control District (UDFCD) in Denver, Colorado. The original worksheet was modified and adapted for the Truckee Meadows Regional Storm Water Quality Management Program by Kennedy/Jenks Consultants.

end of worksheet

Truckee Meadows Regional Storm Water Quality Management Program
Design Guidance Worksheet: Sand Filter Basins TC-41

*** Fill out worksheet from top to bottom** — **Version 1.01 Released April 2007**

Designer:
Company:
Date: May 4, 2007
Project:
Location:

Subbasin #

Key:	User Input	Calculated Result	***Italicized Font Indicates Value is Outside Recommended Range***

1. Water Quality Volume (WQ_V) - Sand Filter Basin Storage

a) Percent of Watershed Impervious Area = I — I = ____ %

b) Drainage Area = A (acres) (43,560 ft^2 = 1 acre) — A = ____ acres

c) Watershed Runoff Coefficient = R_V (unitless) — R_V = ____

d) 90th Percentile Precipitation Depth = P (inches) — P = ____ in

e) Water Quality Volume = WQ_V (ft^3) — WQ_V = ____ ft^3

2. Minimum Filter Surface Area: $A_S = (WQ_V/3)$ — A_S = ____ ft^2

a) Filter Surface Elevation — Z = ____ ft

b) Side Slope of the Filter Basin 4H:1V or flatter — H:V = ____ :1

3. Basin Depth (D) (3' maximum) — D = ____ ft

4. Outlet Works

a) Sand Layer Thickness (18" min.) — ____ in

b) Gravel Layer Thickness (9" min.) — ____ in

c) Overflow Elevation At Top of Design Volume
(Filter Surface Elev. + Estimate of Basin Depth (D)) — ____ ft

5. Site Soils, Drainage Area Characteristics and Drainage Requirements

Answer ALL questions 5a to 5d to determine design requirements

Check "x" only one appropriate box based on following criteria
a) Subgrade is a heavy or expansive clay
b) Subgrade is a silty or clayey sand
c) Subgrade is a well-draining soil
Answer Yes (Y) or No (N) to the following question
d) Does tributary drainage area heve land uses with outdoor use or storage of chemicals or materials that could spill (e.g. a gas station, a hardware store, etc.)? "Y" or "N"

____ 5c = x **and** 5d = N
Design = Infiltration with Permeable Fabric Liner (see # 4)

____ 5b = x **and** 5d = N
Design = Underdrain with Permeable Fabric Liner

____ 5a = x **or** 5d = Y
Design = Underdrain with Impermeable Liner

6. Infiltration Testing

If infiltration proposed, percolation testing required
a) Site infiltration testing conducted (Y or N)
b) Test results: Ave infiltration rate at basin depth = ____ in/hr
Note: Minimum infiltration rate without an underdrain = 0.5 in/hr

____ Other:

7. Describe Provisions for Maintenance

Notes:

Original worksheet developed by and used with the permission of the Urban Drainage and Flood Control District (UDFCD) in Denver, Colorado. The original worksheet was modified and adapted for the Truckee Meadows Regional Storm Water Quality Management Program by Kennedy/Jenks Consultants.

end of worksheet

Truckee Meadows Regional Storm Water Quality Management Program
Design Guidance Worksheet: Storm Water Ponds TC-50

*** Fill out worksheet from top to bottom** — **Version 1.01 Released April 2007**

Designer:

Company:

Date: May 4, 2007

Project:

Location:

Subbasin #

Key: User Input | Calculated Result | ***Italicized Font Indicates Value is Outside Recommended Range***

1. Water Quality Volume (WQ_V)

a) Percent of Watershed Impervious Area = I — I = ____ %

b) Drainage Area = A (acres) (43,560 ft^2 = 1 acre) — A = ____ acres

c) Watershed Runoff Coefficient = R_V (unitless) — R_V = ____

d) 90th Percentile Precipitation Depth = P (inches) — P = ____ in

e) Water Quality Volume = WQ_V (ft^3) — WQ_V = ____ ft^3

2. Permanent Pool

a) Volume: Vol-Pool = 2 * WQ_V — Vol-Pool = ____ ft^3

b) Average Depth — Zone 1 = Littoral Zone - 1' to 2' deep; Zone 2 = Deeper Zone - 4' to 6' deep

Zone 1 = ____ ft

Zone 2 = ____ ft

c) Maximum Zone 2 Permanent Pool Depth (not to exceed 8 feet) — Max Depth = ____ ft

d) Permanent Pool Water Surface Area (Estimated Minimum)

(Zone 1 - Littoral Zone = 25% to 50% of the total surface area) — % = ____ ____ ft^2

(Zone 2 - Deeper Zone = 50% to 75% of the total surface area) — % = ____ ____ ft^2

Total Estimated Minimum Surface Area (A_{Total}) — % = ____ ____ ft^2

3. Forebay Storage

a) Volume = 15% to 25% of Permanent Pool Volume in 2a — Volume = ____ ft^3

b) Depth = 3 feet minimum — Depth = ____ ft

4. Annual/Seasonal Water Balance (Q_{net} has to be positive)

Q_{inflow} = estimated base flow — Q_{inflow} = ____ ft^3/yr

Q_{evap} = loss to evaporation — Q_{evap} = ____ ft^3/yr

$Q_{seepage}$ = loss (or gain) to seepage to groundwater — $Q_{seepage}$ = ____ ft^3/yr

$Q_{E.T.}$ = loss to plant evapotraspiration (average plant area above water surface) — $Q_{E.T.}$ = ____ ft^3/yr

Q_{net} = net quantity of base flow — Q_{net} = ____ ft^3/yr

5. Outlet Structure

a) Outlet Type (Check One)

____ Orifice Plate

____ Perforated Riser Pipe

____ Other: ____

b) Depth of water above centerline of bottom row of perforations, 2' max — D_{BS} = ____ ft

c) Requried Maximum Outlet Area per Row = A_o — A_o = ____ in^2

d) Number of Columns — nc = ____ number

e) Number of Rows = nr — nr = ____ number

f) Total Area of Each Perforation = A_{perf} — A_{perf} = ____ in^2

continue to next page

Truckee Meadows Regional Storm Water Quality Management Program
Design Guidance Worksheet: Storm Water Ponds TC-50

Designer: _____

Company: _____

Date: May 4, 2007

Project: _____ **Subbasin #** _____

Location: _____

6. Basin length to width ratio (minimum L:W = 1.5:1)	L:W = _____ :1
7. Basin Side Slopes (H:V) a) Above the Permanent Pool (4H:1V or flatter)	H:V = _____ :1
b) Below the Permanent Pool	Zone 1, H:V = _____ :1 Littoral Zone Zone 2, H:V = _____ :1 Deeper Zone
8. Dam Embankment Side Slopes (H:V)	H:V = _____ :1
9. Vegetation (Check "x" the type used or describe if "Other")	_____ Native Grass _____ Irrigated Turf Grass _____ Emergent Aquatic Species* _____ Other: _____ *Specify types and densities:
10. Underdrains (Yes "y" or No "N")	_____

Notes: _____

Original worksheet developed by and used with the permission of the Urban Drainage and Flood Control District (UDFCD) in Denver, Colorado. The original worksheet was modified and adapted for the Truckee Meadows Regional Storm Water Quality Management Program by Kennedy/Jenks Consultants.

end of worksheet

Truckee Meadows Regional Storm Water Quality Management Program
Design Guidance Worksheet: Storm Water Wetlands TC-51

*** Fill out worksheet from top to bottom** — **Version 1.01 Released April 2007**

Designer: _____

Company: _____

Date: May 4, 2007

Project: _____

Location: _____

Subbasin # _____

Key: User Input | Calculated Result | ***Italicized Font Indicates Value is Outside Recommended Range***

1. Water Quality Volume (WQ_V)

a) Percent of Watershed Impervious Area = I — I = _____ %

b) Drainage Area = A (acres) (43,560 ft^2 = 1 acre) — A = _____ acres

c) Watershed Runoff Coefficient = R_V (unitless) — R_V = _____

d) 90th Percentile Precipitation Depth = P (inches) — P = _____ in

e) Water Quality Volume = WQ_V (ft^3) — WQ_V = _____ ft^3

2. Wetland Pond Volume, Depth, and Water Surface Area (WS Area)

a) Minimum Calculated Permanent Pool: $Vol_{Pool} \geq 2 * WQ_V$

Calculated Required Minimums:
$Vol_{Pool} \geq$ _____ ft^3
WS Area = _____ ft, estimated

Enter the Actual Design Values:
$Vol_{Pool} \geq$ _____ ft^3, final design
WS Area = _____ ft, final design

b) Forebay
Depth minimum = 3', maximum = 4'
Vol = 15% to 25% of of Permanent Pool Volume in 2A

Depth= _____ ft
Volume= _____ ft^3
Area= _____ ft^2 — % _____

c) Wetland Zones with Emergent Vegetation (0.50' to 1.0' deep)
(Area not more than 50% of Design Water Surface Area)

Depth= _____ ft
Area= _____ ft^2 — % _____

d) Free Water Surface Areas (2' to 4' deep)
(Area = 30% to 50% of Design WS Area)

Depth= _____ ft
Area= _____ ft^2 — % _____

3. Average Side Slope Above Water Surface (4H:1V or flatter) — H:V = 4.00 :1

4. Outlet Works

a) Outlet Type (Check "x" One)

_____ Orifice Plate
_____ Perforated Riser Pipe
_____ Other: _____

b) Depth of water above the centerline of the bottom row of perforations = D_{BS} (2' max.) — D_{BS} = _____ ft

c) Recommended Outlet Area per Row = A_o — A_o = _____ in^2

d) Number of Columns = nc — nc = _____ Number

e) Number of Rows = nr — nr = _____ Number

f) Total Area of Each Perforation = A_{perf} — A_{perf} = _____ in^2

5. Basin Use for Quantity Controls
(Check "x" one or describe if "Other")

_____ Detention within the facility
_____ Detention upstream of the facility
_____ Other: _____

continue to next page

Truckee Meadows Regional Storm Water Quality Management Program
Design Guidance Worksheet: Storm Water Wetlands TC-51

Designer:
Company:
Date: May 4, 2007
Project:
Location:

Subbasin #

6. Basin length to width ratio (minimum L:W = 1.5:1)	L:W = _____ :1
7. Basin Side Slopes (no steeper than H:V = 4:1)	H:V = _____ :1
8. Annual/Seasonal Water Balance (Q_{net} has to be positive) Q_{inflow} = estimated base flow Q_{evap} = loss to evaporation $Q_{seepage}$ = loss (or gain) to seepage to groundwater $Q_{E.T.}$ = loss to plant evapotraspiration (average plant area above water surface) Q_{net} = net quantity of base flow	Q_{inflow} = _____ acre-ft/yr Q_{evap} = _____ acre-ft/yr $Q_{seepage}$ = _____ acre-ft/yr $Q_{E.T.}$ = _____ acre-ft/yr Q_{net} = _____ acre-ft/yr
9. Vegetation Check "x" the method being applied or describe if "other" - vegetation should be kept 2 feet from waters edge	_____ Native Grass _____ Irrigated Turf Grass Side Slopes _____ Wetland Species in Pool* _____ Other: _____ *Describe Species Density and Mix.

Notes:

Original worksheet developed by and used with the permission of the Urban Drainage and Flood Control District (UDFCD) in Denver, Colorado. The original worksheet was modifie and adapted for the Truckee Meadows Regional Storm Water Quality Management Program by Kennedy/Jenks Consultants.

end of worksheet

Truckee Meadows Regional Storm Water Quality Management Program
Design Guidance Worksheet: Surface Sand Filter TC-60

*** Fill out worksheet from top to bottom** **Version 1.01 Released April 2007**

Designer: **page 1 of 1**

Company:

Date: May 4, 2007

Project: **Subbasin #**

Location:

Key: User Input | Calculated Result | ***Italicized Font Indicates Value is Outside Recommended Range***

1. Water Quality Volume (WQ_V)

a) Percent of Watershed Impervious Area = I	I = ____ %
b) Drainage Area = A (acres) (43,560 ft^2 = 1 acre) - drainage areas between 0.5 and 50 acres	A = ____ acres
c) Watershed Runoff Coefficient = R_V (unitless)	R_V = ____
d) 90th Percentile Precipitation Depth = P (inches)	P = ____ in
e) Water Quality Volume = WQ_V (ft^3)	WQ_V = ____ ft^3

2. Sedimentation Basin Design

a) Depth of Sand Filter = d_f (ft) (minimum depth of 3 ft)	d_f = ____ ft
b) Surface Area of the Sedimentation Basin = A_S (ft^2); minimum WQv/10	A_S = ____ ft^2
c) Basin Length	L = ____ ft
d) Basin Width	W = ____ ft
e) Basin length to width ratio (L:W, min. 2:1)	L:W = ____ :1

3. Sand Filter Basin Design

a) Sand bed depth = d_f (minimum depth 1.5 feet)	d_f = ____ ft
b) Coef of permeability for sand filter = k ft/hr (typically 1.18 ft/hr for clean, well-graded sand and gravel)	k = ____ ft/hr
c) One half the maximum allowable water depth (2h) over filter bed = h	h = ____ ft
d) Time required for the WQ_V to pass through the filter = t_f	t_f = ____ hrs
e) Surface area of the filter basin = A_f (ft^2)	A_f = ____ ft^2

Notes:

Original worksheet developed by and used with the permission of the Urban Drainage and Flood Control District (UDFCD) in Denver, Colorado. The original worksheet was modified and adapted for the Truckee Meadows Regional Storm Water Quality Management Program by Kennedy/Jenks Consultants.

end of worksheet

Truckee Meadows Regional Storm Water Quality Management Program
Design Guidance Worksheet: Underground Sand Filter - D.C. Type TC-61(a)

*** Fill out worksheet from top to bottom** — **Version 1.01 Released April 2007**

Designer:
Company:
Date: May 4, 2007
Project:
Location:

Subbasin #

Key: User Input | Calculated Result | ***Italicized Font Indicates Value is Outside Recommended Range***

1. Water Quality Volume (WQ_v)

a) Percent of Watershed Impervious Area = I — I = ____ %

b) Drainage Area = A (acres) (43,560 ft^2 = 1 acre); max 1.5 acres — A = ____ acres

c) Watershed Runoff Coefficient = R_V (unitless) — R_V = ____

d) 90th Percentile Precipitation Depth = P (inches) — P = ____ in

e) Water Quality Volume = WQ_V (ft^3) — WQ_V = ____ ft^3

2. Sand Filter Basin Design

a) Filter depth = $d_f = d_g + d_s$
d_g = gravel bed, minimum 16-inches
d_s = sand filter layer, minimum 18-inches

d_g = ____ in ____ ft
d_s = ____ in ____ ft
d_f = ____ ft

b) Coef of permeability for sand filter = k ft/hr (typically 1.18 ft/hr for clean, well-graded sand and gravel) — k = ____ ft/hr

c) Maximum allowable water depth in sand filter = h_{max}
h_{max} = inlet elevation - outlet elevation — h_{max} = ____ ft

d) One half the maximum allowable water depth (2h) over filter bed = h ($2h = h_{max} - d_f$) — h = ____ ft

e) Time required for the WQ_V to pass through the filter = t_f (max time = 48 hrs) — t_f = ____ hrs

f) Surface area of the filter basin = A_f (ft^2) — A_f = ____ ft^2

3. Filter Dimensions

a) Filter width = W_f — W_f = ____ ft

b) Length: Lf = Af/Wf — L_f = ____ ft

4. System Storage Volume

a) Available Storage Above Filter Bed: $V_{tf} = A_f \times 2h$ — V_{tf} = ____ ft^3

b) Storage in Filter Voids: $V_v = 0.4 \times A_f \times d_f$ — V_v = ____ ft^3

c) Flow Through the Filter During Filling
$V_q = kA_f(d_f + h)t_f/d_f$, assume t_f = 1 hr and k per 2.b above — V_q = ____ ft^3

5. Permanent Pool

a) Required net storage
Vst = WQv - Vtf - Vv - Vq — V_{st} = ____ ft^3

b) Minimum Length: $L_{pm} = V_{st}/(2h)(W_f)$ — L_{pm} = ____ ft

Notes:

Original worksheet developed by and used with the permission of the Urban Drainage and Flood Control District (UDFCD) in Denver, Colorado. The original worksheet was modified and adapted for the Truckee Meadows Regional Storm Water Quality Management Program by Kennedy/Jenks Consultants.

end of worksheet

Truckee Meadows Regional Storm Water Quality Management Program
Design Guidance Worksheet: Underground Sand Filter - Delaware Type TC-61(b)

*** Fill out worksheet from top to bottom**

Version 1.01 Released April 2007

Designer:

Company:

Date: May 4, 2007

Project:

Location:

Subbasin #

Key: User Input | Calculated Result | ***Italicized Font Indicates Value is Outside Recommended Range***

1. Water Quality Volume (WQ_V)

a) Percent of Watershed Impervious Area = I — I = ____ %

b) Drainage Area = A (acres) (43,560 ft^2 = 1 acre); Max 5 acres — A = ____ acres

c) Watershed Runoff Coefficient = R_V (unitless) — R_V = ____

d) 90th Percentile Precipitation Depth = P (inches) — P = ____ in

e) Water Quality Volume = WQ_V (ft^3) — WQ_V = ____ ft^3

2 Sand Filter Basin Design

a) Filter depth = $d_f = d_g + d_s$
d_g = gravel bed, minimum 16-inches
d_s = sand filter layer, minimum 18-inches

d_g = ____ in ____ ft
d_s = ____ in ____ ft
d_f = ____ ft

b) Coef of permeability for sand filter = k ft/hr (typically 1.18 ft/hr for clean well-graded sand and gravel) — k = ____ ft/hr

c) Maximum allowable water depth in sand filter = h_{max}
h_{max} = inlet elevation - outlet elevation — h_{max} = ____ ft

d) One half the maximum allowable water depth (2h) over filter bed = h (2h = h_{max} - d_f)
2h = ____
h = ____ ft

e) Time required for the WQ_V to pass through the filter = t_f (max time = 48 hrs) — t_f = ____ hrs

f) Sediment Chamber Area (A_S) and Filter Surface Area (Af) = Af = A_S (ft2) — $A_S = A_f$ = ____ ft^2

3. Sediment Chamber and Filter Length: $L_S = L_f = A_f/W_f$ — $L_S = L_f$ = ____ ft

Width = $W_S = W_f$ (typically 18 to 30 inches wide) — W_f = ____ in ____ ft

4. System Storage Volume

a) Available Storage Above Filter Bed: $V_{tf} = A_f \times 2h$ — V_{tf} = ____ ft^3

b) Through Filter Voids: $V_v = 0.4 \times A_f \times d_f$ — V_v = ____ ft^3

c) Flow Through the Filter During Filling:
$V_q = kA_f(d_f + h)t_f/d_f$, tf = 1 hr — V_q = ____ ft^3

5. Permanent Pool

a) Required Net Storage:
V_{st} = WQv - Vtf - Vv - Vq — V_{st} = ____ ft^3

b) Minimum Length: $L_{pm} = V_{st}/(2h)(W_f)$ — L_{pm} = ____ ft

Notes:

Original worksheet developed by and used with the permission of the Urban Drainage and Flood Control District (UDFCD) in Denver, Colorado. The original worksheet was modified and adapted for the Truckee Meadows Regional Storm Water Quality Management Program by Kennedy/Jenks Consultants.

end of worksheet

Truckee Meadows Regional Storm Water Quality Management Program
Design Guidance Worksheet: Porous Pavement Detention TC-62(a)

*** Fill out worksheet from top to bottom**

Version 1.01 Released April 2007

Designer:

Company:

Date: May 4, 2007

Project:

Location:

Subbasin #

Key: User Input | Calculated Result | ***Italicized Font Indicates Value is Outside Recommended Range***

1. Water Quality Volume (WQ_V)

a) Percent of Watershed Impervious Area = I	I = ____ %
b) Drainage Area = A (acres) (43,560 ft^2 = 1 acre)	A = ____ acres
c) Watershed Runoff Coefficient = R_V (unitless)	R_V = ____
d) 90th Percentile Precipitation Depth = P (inches)	P = ____ in
e) Water Quality Volume = WQ_V (ft^3)	WQ_V = ____ ft^3
f) Porous Pavement Surface Elevation	Elev. = ____ ft

2. Required Minimum Open-Celled Block Paver Surface Area

A = WQ_V/ 0.17

Overflow Inlet Elevation: Porous Pavement Elev. + 0.17 feet

A = ____ ft^2

Elev. = ____ ft

3. Open-Celled Block Paver Properties

Block Name: ____

Manufacturer: ____

Note: Blocks should have a minimum open surface area of 40%

Min. Open Surface Area = ____ %

Block Thickness = ____ in

4. Paver Block Infill (Check "x" the type used or describe "Other")

____ Open-Graded Sand

____ Other: ____

5. Base Course

The following three items are all required.

a) Leveling Course or Bedding Layer
- check "x" one, then enter thickness

____ 1" Class B backfill, Sec. 200.03.03 SSPWC

____ Other: ____

____ inches

b) Filter Fabric Between Sand & Gravel (check "x" one, describe if other)
- Top of Base Course

____ Woven Geotextile Fabric

____ Other: ____

c) Gravel Base Course (Open-Graded Aggregate)
- check "x" one, describe if other

____ 8" Class C backfill, Sec. 200.03.04 SSPWC

____ Other: ____

- 8" layer minimum thickness

____ inches

continue to next page

Truckee Meadows Regional Storm Water Quality Management Program
Design Guidance Worksheet: Porous Pavement Detention- TC-62(a)

Designer: _____

Company: _____

Date: _____

Project: _____ **Subbasin #** _____

Location: _____

6. Perimeter Wall (check "x" type, describe if other) - recommended to be 6 inches thick in width - depth must extend 6 inches from the bottom of the base course	____ Concrete ____ Other ____ width = ____ in depth = ____ in
7. Draining of porous pavement **Answer questions 7a through 7d to determine design requirements** **Check "x" only one appropriate box based on following criteria** a) Subgrade is a heavy or expansive clay ____ b) Subgrade is a silty or clayey sand ____ c) Subgrade is a well-draining soil ____ **Answer Yes (Y) or No (N) to the following question** d) Does tributary drainage area have land uses with outdoor use or storage of chemicals or materials that could spill (e.g. a gas station, a hardware store, etc.)? "Y" or "N" ____	____ 7c = x **and** 7d = N Design: Infiltration to subgrade with Woven geotextile fabric liner ____ 7a = x **or** 7d = Y Design: Underdrain with 16-mil. Impermeable fabric ____ 7b = x **and** 7d = N Design: Underdrain with Woven geotextile fabric ____ Other: ____
8. Overflow For Larger Storms	____ Yes / No (y or n)

Notes: _____

Original worksheet developed by and used with the permission of the Urban Drainage and Flood Control District (UDFCD) in Denver, Colorado. The original worksheet was modified and adapted for the Truckee Meadows Regional Storm Water Quality Management Program by Kennedy/Jenks Consultants.

end of worksheet

Truckee Meadows Regional Storm Water Quality Management Program
Design Guidance Worksheet: Open-Celled Block Pavers TC-62(b)

*** Fill out worksheet from top to bottom** — **Version 1.01 Released April 2007**

Designer:

Company:

Date: May 4, 2007

Project:

Location:

Subbasin #

Key: User Input | Calculated Result | ***Italicized Font Indicates Value is Outside Recommended Range***

1. Water Quality Volume (WQ_V)

a) Percent of Watershed Impervious Area = I — I = ____ %

b) Drainage Area = A (acres) (43,560 ft^2 = 1 acre) — A = ____ acres

c) Watershed Runoff Coefficient = R_V (unitless) — R_V = ____

d) 90th Percentile Precipitation Depth = P (inches) — P = ____ in

e) Water Quality Volume = WQ_V (ft^3) — WQ_V = ____ ft^3

2. Open-Celled Block Pavers Properties

Block Name: ____

Manufacturer: ____

Note: Blocks should have a minimum open surface area void space of 20%

Min. Open Surface Area = ____ %

Block Thickness = ____ in

3. Block Paver Cells Fill Material (Check the type or describe "Other")

____ Open-Graded Sand

____ Turf

____ Other: ____

4. Base Course

The following three items are all required.

a) Leveling Course or Bedding Layer - Open-Graded Aggregate
- check "x" one, describe if other

____ Class B backfill, Section 200.03.03 SSPWC

____ Other: ____

- recommended bedding layer thickness of 1 to 2 inches — ____ inches

b) Fitler Fabric Between Base Course & Bedding Layer
-Top of Base Course
(check "x" one, describe if other)

____ Woven Geotextile Fabric

____ Other: ____

c) Gravel Base Course (Open-Graded Aggregate)

____ 8" min. Class C backfill, Sec. 200.03.04 SSPWC

____ Other: ____

8" minimum thickness required — ____ inches ____ ft

5. Design Impervious Area to Porous Pavement Area Ratio (Max. = 2): — Ratio = ____ (A_{imp} / A_{POROUS})

6. Perimeter Wall (check "x" type, describe if other)
- recommended to be 6 inches thick in width
- depth must extend 6 inches from the bottom of the base course

____ Concrete

____ Other ____

width = ____ in

depth = ____ in

7. Contained Cells

a) Type (check "x" one)

____ 16-mil. (min.) Impermeable Liner

____ Concrete Wall

b) Slope of the base course — S_O = ____ ft/ft

c) Distance between cutoffs (normal to flow, L) — L = ____ ft , L_{MAX} = ____ ft

continue to next page

Truckee Meadows Regional Storm Water Quality Management Program
Design Guidance Worksheet: Open-Celled Block Pavers TC-62(b)

Designer: _____

Company: _____

Date: May 4, 2007

Project: _____ **Subbasin #** _____

Location: _____

8. Draining of modular block pavement

Answer questions 8a to 8d to determine design requirements

Check "x" only one appropriate box based on following criteria

a) Subgrade is a heavy or expansive clay _____

b) Subgrade is a silty or clayey sand _____

c) Subgrade is a well-draining soil _____

Answer Yes (Y) or No (N) to the following question

d) Does tributary drainage area have land uses with outdoor use or storage of chemicals or materials that could spill (e.g. a gas station, a hardware store, etc.)? "Y" or "N" _____

_____ 8c = x **and** 8d = N
Design: Infiltration to subgrade with Woven geotextile fabric liner

_____ 8a = x **or** 8d = Y
Design: Underdrain with 16-mil. Impermeable fabric

_____ 8b = x **and** 8d = N
Design: Underdrain with Woven geotextile fabric

_____ Other: _____

Notes: _____

Original worksheet developed by and used with the permission of the Urban Drainage and Flood Control District (UDFCD) in Denver, Colorado. The original worksheet was modified and adapted for the Truckee Meadows Regional Storm Water Quality Management Program by Kennedy/Jenks Consultants.

end of worksheet

Truckee Meadows Regional Storm Water Quality Management Program
Design Guidance Worksheet: Open-Jointed Block Pavers TC-62(c)

*** Fill out worksheet from top to bottom** — **Version 1.01 Released April 2007**

Designer: _____

Company: _____

Date: May 4, 2007

Project: _____

Location: _____

Subbasin # _____

Key: User Input | Calculated Result | ***Italicized Font Indicates Value is Outside Recommended Range***

1. Water Quality Volume (WQ_V)

a) Percent of Watershed Impervious Area = I — I = _____ %

b) Drainage Area = A (acres) (43,560 ft^2 = 1 acre) — A = _____ acres

c) Watershed Runoff Coefficient = R_V (unitless) — R_V = _____

d) 90th Percentile Precipitation Depth = P (inches) — P = _____ in

e) Water Quality Volume = WQ_V (ft^3) — WQ_V = _____ ft^3

2. Open-Jointed Block Paver Properties:

Block Name: _____

Manufacturer: _____

Note: Blocks shall have a minimum 8% open surface area

Min. Open Surface Area = _____ %

Block Thickness = _____ in

3. Joint-Fill Material (Check "x" the type, describe if "Other")

_____ Class D backfill, Section 200.03.04 SSPWC

_____ Other: _____

4. Base Course

The following three items are all required.

a) Bedding Layer or Leveling Course (Open-Graded Aggregate)

- check "x" one, describe if "other"

_____ Class B Backfill, Section 200.03.03 SSPWC

_____ Other: _____

- recommended thickness of 1 to 2 inches — _____ inches

b) Filter Fabric Between Base Course & Bedding Layer (Top of Base Course)

- check "x" one, describe if "other"

_____ Woven Geotextile Fabric

_____ Other: _____

c) Gravel Base Course (Class C backfill, 200.03.04 SSPWC)

7" minimum thickness required

_____ inches _____ ft

5. Design Impervious Area to Porous Pavement Area Ratio (Max. = 2):

Ratio = _____ (A_{IMP} / A_{POROUS})

6. Perimeter Wall (check "x" type, describe if other)

- recommended to be 6 inches thick in width
- depth must extend 6 inches from the bottom of the base course

_____ Concrete

_____ Other _____

width = _____ in

depth = _____ in

7. Contained Cells

a) Type (check "x" one)

_____ 16-mil. (min.) Impermeable Liner

_____ Concrete Wall

b) Slope of the base course — S_O = _____ ft/ft

c) Distance between cutoffs (normal to flow, L) — L = _____ ft , L_{MAX} = _____ ft

continue to next page

Truckee Meadows Regional Storm Water Quality Management Program
Design Guidance Worksheet: Open-Celled Block Pavers TC-62(c)

Designer:

Company:

Date: May 4, 2007

Project:

Subbasin #:

Location:

8. Draining of Open-Jointed Block Pavers

Answer questions 8a to 8d to determine design requirements

Check "x" only one appropriate box based on following criteria

a) Subgrade is a heavy or expansive clay

b) Subgrade is a silty or clayey sand

c) Subgrade is a well-draining soil

Answer Yes (Y) or No (N) to the following question

d) Does tributary drainage area have land uses with outdoor use or storage of chemicals or materials that could spill (e.g. a gas station, a hardware store, etc.)? "Y" or "N"

8c = x **and** 8d = N
Design: Infiltration to subgrade with Woven geotextile fabric liner

8a = x **or** 8d = Y
Design: Underdrain with 16-mil. Impermeable fabric

8b = x **and 8**d = N
Design: Underdrain with Woven geotextile fabric

Other:

Notes:

Original worksheet developed by and used with the permission of the Urban Drainage and Flood Control District (UDFCD) in Denver, Colorado. The original worksheet was modified and adapted for the Truckee Meadows Regional Storm Water Quality Management Program by Kennedy/Jenks Consultants.

end of worksheet

Truckee Meadows Regional Storm Water Quality Management Program
Design Guidance Worksheet: Porous Concrete and Asphalt Pavement TC-62(d)

*** Fill out worksheet from top to bottom** — **Version 1.01 Released April 2007**

Designer:

Company:

Date: May 4, 2007

Project:

Location:

Subbasin #

Key: User Input | Calculated Result | ***Italicized Font Indicates Value is Outside Recommended Range***

1. Water Quality Volume (WQ_V)

a) Percent of Watershed Impervious Area = I — I = ____ %

b) Drainage Area = A (acres) (43,560 ft^2 = 1 acre) — A = ____ acres

c) Watershed Runoff Coefficient = R_V (unitless) — R_V = ____

d) 90th Percentile Precipitation Depth = P (inches) — P = ____ in

e) Water Quality Volume = WQ_V (ft^3) — WQ_V = ____ ft^3

2. Type of Installation

____ Porous Concrete
____ Porous Asphalt

3. Porous Concrete or Asphalt Surface

a) Porous Concrete Slab Thickness (5 inches minimum) — ____ in

b) Porous Asphalt Surface Thickness — ____ in

4. Design Impervious Area to Porous Pavement Area Ratio (Max = 2)

Ratio = ____ (A_{IMP} / A_{POROUS})

5. Draining of porous pavement
Answer questions 5a to 5d to determine design requirements

Check "x" only one appropriate box based on following criteria
a) Subgrade is a heavy or expansive clay ____
b) Subgrade is a silty or clayey sand ____
c) Subgrade is a well-draining soil ____
Answer Yes (Y) or No (N) to the following question
d) Does tributary drainage area have land uses with outdoor use or storage of chemicals or materials that could spill (e.g. a gas station, a hardware store, etc.)? "Y" or "N" ____

____ 5c = x **and** 5d = N
Design: Infiltration to subgrade with Woven geotextile fabric liner

____ 5a = x **or** 5d = Y
Design: Underdrain with 16-mil. Impermeable fabric

____ 5b = x **and** 5d = N
Design: Underdrain with Woven geotextile fabric

____ Other: ____

6. Base Course and Sub-Layer

a) Gravel Base Course — ____ inches ____ ft

b) Bottom sand filter layer required? ____
Only required for installations with underdrains
- if yellow box above says "yes", **requried**.

____ inches, 7"minimum

c) Liners
i) Woven geotextile fabric on top of base course
- check "x" one, desscibe if "other"

____ Woven Geotextile Fabric
____ Other: ____

ii) Liner under base course, between base course and sand filter layer
- check "x" one, descibe if "other"

____ Woven Geotextile Fabric
____ 16-mil. Impermeable Fabric Liner, **required** if checked
____ Other: ____

continue to next page

Truckee Meadows Regional Storm Water Quality Management Program
Design Guidance Worksheet: Porous Concrete and Asphalt Pavement TC-62(d)

Designer: _____ **page 2 of 2**

Company: _____

Date: May 4, 2007

Project: _____ **Subbasin #** _____

Location: _____

7. Contained Cells

a) Type (check "x" one) _____ 16-mil. (min.) Impermeable Liner
_____ Concrete Wall

b) Slope of the base course S_O = _____ ft/ft

c) Distance between cutoffs (normal to flow, L) L = _____ ft , L_{MAX} = _____ ft

Notes:

Original worksheet developed by and used with the permission of the Urban Drainage and Flood Control District (UDFCD) in Denver, Colorado. The original worksheet was modified and adapted for the Truckee Meadows Regional Storm Water Quality Management Program by Kennedy/Jenks Consultants.

end of worksheet

Truckee Meadows Regional Storm Water Quality Management Program

Design Guidance Worksheet: Porous Turf Pavement TC-62(e)

*** Fill out worksheet from top to bottom** — **Version 1.01 Released April 2007**

Designer:

Company:

Date: May 4, 2007

Project:

Location:

Subbasin #

Key: User Input | Calculated Result | ***Italicized Font Indicates Value is Outside Recommended Range***

1. Water Quality Volume (WQ_V)

a) Percent of Watershed Impervious Area = I — I = ____ %

b) Drainage Area = A (acres) (43,560 ft^2 = 1 acre) — A = ____ acres

c) Watershed Runoff Coefficient = R_V (unitless) — R_V =

d) 90th Percentile Precipitation Depth = P (inches) — P = ____ in

e) Water Quality Volume = WQ_V (ft^3) — WQ_V = ____ ft^3

2. Drainage Requirements for Porous Turf

Answer questions 2a to 2d to determine design requirements

Check "x" only one appropriate box based on following criteria

a) Subgrade is a heavy or expansive clay
b) Subgrade is a silty or clayey sand
c) Subgrade is a well-draining soil

Answer Yes (Y) or No (N) to the following question

d) Does tributary drainage area have land uses with outdoor use or storage of chemicals or materials that could spill (e.g. a gas station, a hardware store, etc.)? "Y" or "N"

2c = x **and** 2d = N
Design: Infiltration to subgrade with Woven geotextile fabric liner

2a = x **or** 2d = Y
Design: Underdrain with 16-mil. Impermeable fabric

2b = x **and** 2d = N
Design: Underdrain with Woven geotextile fabric

Other:

3. Selection of Porous Turf to be used (check "x" one)

Reinforced Grass
Unreinforced Turf

4. Porous Turf Installation

a) Root Zone — ____ in ____ ft

b) Base Course: Open-Graded Aggregate — ____ in ____ ft

c) Woven Geotextile Fabric Between Leveling Course & Gravel (Top of Base Course)
check "x" one, describe if other

Woven Geotextile Fabric
Other:

d) Liner Between Gravel & Subgrade (Bottom of Base Course)
check "x" one, describe if other

Woven Geotextile Fabric
16-mil. Impermeable Fabric Liner **required if checked**
Other:

5. Turf Reinforcement
check "x" one or check "none" if using unreinforced turf

Reinforcing Mesh
Reinforcing Mat
Integral Fibers
None

6. Design Impervious Area to Porous Pavement Area Ratio
Maximum Ratio = 2

Ratio = ____ (A_{IMP} / A_{POROUS})

Notes:

Original worksheet developed by and used with the permission of the Urban Drainage and Flood Control District (UDFCD) in Denver, Colorado. The original worksheet was modified and adapted for the Truckee Meadows Regional Storm Water Quality Management Program by Kennedy/Jenks Consultants.

end of worksheet

Truckee Meadows Regional Storm Water Quality Management Program
Design Guidance Worksheet: Porous Gravel Pavement TC-62(f)

*** Fill out worksheet from top to bottom** **Version 1.01 Released April 2007**

Designer:

Company:

Date: May 4, 2007

Project:

Location:

Subbasin #

Key: User Input | Calculated Result | ***Italicized Font Indicates Value is Outside Recommended Range***

1. Water Quality Volume (WQ_V)

a) Percent of Watershed Impervious Area = I — I = ____ %

b) Drainage Area = A (acres) (43,560 ft^2 = 1 acre) — A = ____ acres

c) Watershed Runoff Coefficient = R_V (unitless) — R_V = ____

d) 90th Percentile Precipitation Depth = P (inches) — P = ____ in

e) Water Quality Volume = WQ_V (ft^3) — WQ_V = ____ ft^3

2. Porous Gravel Course
Depth of gravel base course (D) — D = ____ inches ____ ft

3. Draining of porous gravel pavement

Answer questions 3a to 3d to determine design requirements
Check "x" only one appropriate box based on following criteria
a) Subgrade is a heavy or expansive clay ____
b) Subgrade is a silty or clayey sand ____
c) Subgrade is a well-draining soil ____
Answer Yes (Y) or No (N) to the following question
d) Does tributary drainage area have land uses with outdoor use or storage of chemicals or materials that could spill (e.g. a gas station, a hardware store, etc.)? "Y" or "N" ____

____ 3c = x **and** 3d = N
Design: Infiltration to subgrade with Woven geotextile fabric liner

____ 3a = x **or** 3d = Y
Design: Underdrain with 16-mil. Impermeable fabric

____ 3b = x **and** 3d = N
Design: Underdrain with Woven geotextile fabric

____ Other: ____

4. Base Course and Sub-Layer

a) Bottom sand filterlayer required? ____
Only required for installations over expansive soils and with underdrains

____ in (4" minimum)
____ Other: ____

b) Liners
i) With underdrain system:
(check "x" one, describe if "other")
- Liner to be installed on top of and below sand filter layer

____ Woven Geotextile Fabric
____ Other: ____

- Liner to be installed under base course and below underdrain trench if checked "x" to prohibit infiltration

____ 16-mil. Impermeable Fabric Liner **required** under base course with underdrain system

ii) Without Underdrain System
(check "x" one, describe if "other")

____ Woven Geotextile Fabric
____ Other: ____

5. Design Impervious Area to Porous Pavement Area Ratio (Max. = 2) — Ratio = ____ (A_{IMP} / A_{POROUS})

continue to next page

Truckee Meadows Regional Storm Water Quality Management Program
Design Guidance Worksheet: Porous Gravel Pavement TC-62(f)

Designer: _____ **page 2 of 2**

Company: _____

Date: May 4, 2007

Project: _____ **Subbasin #**

Location: _____ _____

6. Contained Cells

a) Type (check "x" one) _____ 16-mil. (min.) Impermeable Liner
_____ Concrete Wall

b) Slope of the base course S_O = _____ ft/ft

c) Distance between cutoffs (normal to flow, L) L = _____ ft, L_{MAX} = _____ ft

Notes: _____

Original worksheet developed by and used with the permission of the Urban Drainage and Flood Control District (UDFCD) in Denver, Colorado. The original worksheet was modified and adapted for the Truckee Meadows Regional Storm Water Quality Management Program by Kennedy/Jenks Consultants.

end of worksheet

Truckee Meadows Regional Storm Water Quality Management Program
Design Guidance Worksheet: Open-Celled Plastic Grids TC-62(g)

*** Fill out worksheet from top to bottom** — **Version 1.01 Released April 2007**

Designer:

Company:

Date: May 4, 2007

Project:

Location:

Subbasin #

Key: User Input | Calculated Result | ***Italicized Font Indicates Value is Outside Recommended Range***

1. Water Quality Volume (WQ_v)

a) Percent of Watershed Impervious Area = I — I = ____ %

b) Drainage Area = A (acres) (43,560 ft^2 = 1 acre) — A = ____ acres

c) Watershed Runoff Coefficient = R_v (unitless) — R_v = ____

d) 90th Percentile Precipitation Depth = P (inches) — P = ____ in

e) Water Quality Volume = WQ_v (ft^3) — WQ_v = ____ ft^3

2. Open-Celled Plastic Grid Properties:

Model:
Manufacturer:

Min. Open Surface Area = ____ %
Grid Thickness = ____ in

3. Fill Material (Check "x" the type or describe "Other")

____ Open-Graded Aggregate
____ Turf
____ Other: ____

4. Reinforced Grass Pavement

a) Setting Layer for Open-Celled Plastic Grid — ____ in ____ ft

b) Base Course — ____ in ____ ft

c) Liner Between Base Course and Subgrade (Bottom of Base Course)
- check "x" one, describe if "other"

____ Woven Geotextile Fabric
____ 16-mil. Impermeable Fabric Liner **required** (from #5)
____ Other: ____

5. Drainage Requirements for Open-Celled Plastic Grids

Answer questions 5a to 5d to determine design requirements
Check "x" only one appropriate box based on following criteria
a) Subgrade is a heavy or expansive clay ____
b) Subgrade is a silty or clayey sand ____
c) Subgrade is a well-draining soil ____
Answer Yes (Y) or No (N) to the following question
d) Does tributary drainage area have land uses with outdoor use or storage of chemicals or materials that could spill (e.g. a gas station, a hardware store, etc.)? "Y" or "N" ____

____ 5c = x **and** 5d = N
Design: Infiltration to subgrade with Woven geotextile fabric liner

____ 5a = x **or** 5d = Y
Design: Underdrain with 16-mil. Impermeable fabric

____ 5b = x **and** 5d = N
Design: Underdrain with Woven geotextile fabric

____ Other: ____

Notes:

Original worksheet developed by and used with the permission of the Urban Drainage and Flood Control District (UDFCD) in Denver, Colorado. The original worksheet was modified and adapted for the Truckee Meadows Regional Storm Water Quality Management Program by Kennedy/Jenks Consultants.

end of worksheet

Appendix D

District Health Department Vector Control Standards

WASHOE COUNTY DISTRICT HEALTH DEPARTMENT

District Board Of Health Regulations Governing The Prevention Of Vector-Borne Diseases

Resolution

Regulations Governing The Prevention Of Vector-Borne Diseases

Whereas, the Washoe County District Board of Health has been established pursuant to ***NRS 439.370 et. seq.*** and vested thereby with jurisdiction over all public health matters within the geographic boundaries of Washoe County, Nevada; and

Whereas, ***NRS 439.410 3a, 3d,*** permits local authorities to adopt, amend, and enforce reasonable rules and regulations consistent with law, to prevent and control nuisances, and thereby promote the public health;

Whereas, the Health Officer shall have authority to order the abatement or removal of any nuisance detrimental to the public health in accordance with the laws relating to such matters. (***NRS 439.490***), and

Now, Therefore, Be It Resolved that the Washoe County District Board of Health does hereby adopt the following regulations governing the prevention of vector-borne diseases within the Washoe County Health District; and the Washoe County District Board of Health does hereby request approval of said regulations by the Nevada State Board by Chapter 439 of the Nevada Revised Statutes.

Table of Contents

		Page
Section 010	Definitions	1
Section 030	Vector-Borne Disease Development Plan Review Permitting	4
Section 040	Standards For Vector-Borne Disease Prevention Arising From Proposed Developments	5
Section 050	Application for Variance	10
Section 060	Unlawful Acts and Penalties	11
Section 070	Circumvention and Interpretation	11
Section 080	Severability	11
Illustrations	Aeration Placement Schemes	14

General Provisions

The purpose of this document is to establish regulations and to provide information to help professionals in public health, planning, and other disciplines who are involved in the preparation and planning or review of project reports. Project reports provide information on the purpose, feasibility, physical aspects, and / or impacts of proposed undertakings. Such reports, provide an opportunity for public awareness and scrutiny of a proposed projects' impacts. Protection of the public health requires that full advantage be taken of this opportunity. Vector-borne disease professionals are concerned about potential vector conditions and diseases affecting people within the District Health Department's jurisdictions. This awareness and the programs' expertise on specific vector-borne disease concerns, places on them the responsibility for reviewing reports of proposed projects and for requiring, if necessary, that certain vector-borne disease prevention standards be met. There are two principle types of potential impacts concerning vector-borne diseases that must be addressed when reviewing a project report. These are: 1.) those projects that may create a favorable condition or habitat for vectors, e.g. water projects that may produce mosquitoes, and 2.) those that may be impacted by an existing vector population or disease potential, e.g. subdivisions in rural areas. Either or both of these may be of concern in the review of a proposed project. Managing or reducing the potential for the production of mosquito breeding for example, is the responsibility of the Vector-Borne Diseases Program of the District Health Department, and the information provided in this document is intended to help its readers achieve goals of source reduction or elimination. These regulations represent standards required for the prevention of vector-borne diseases in land and water development. These standards have been developed to mitigate the impact and severity of effect on human populations. Furthermore, these standards will form the basis from which conditions will be sought during the preparation and review of project reports and environmental documents. This will assure that local vector potentials or concerns are addressed and that all ordinances are complied with while remaining in compliance with the provisions of the Federal Clean Water Act. The review process shall be conducted without delay in a timely manner, while encouraging flexibility of design to meet the standards set forth in this document.

010. DEFINITIONS

As used in this regulation, unless the context otherwise requires, the words and terms described in Sections 010.001 through 010.028 inclusive, have the meanings ascribed to them in those sections.

010.002

"Approved", means approved in writing by the Health Authority.

010.003

"Basic Fee", shall mean the fee / charge for one acre.

010.004

"CC&Rs", shall mean the covenants, conditions, and restrictions adopted for a project.

010.005

"District Board" defined. "District Board or Board" means the Washoe County District Board of Health.

010.006

"Department" defined. "Department" means the Washoe County District Health Department.

010.008

"District Health Officer" means the person appointed by the District Board to administer activities of the Washoe County District Health Department within the Health District pursuant to the authority of State and local health laws and regulations.

010.009

Enabling Statutes. These regulations are adopted pursuant to ***NRS 439.370, NRS 439.490,*** and ***NRS 439.410 3a,*** and ***3d.***

010.010

"Health Authority" defined. "Health Authority" means the Washoe County District Health Department and its employees.

010.012

"Health District" means the Washoe County District Health Department created pursuant to Chapter 439 of the Nevada Revised Statues.

010.013

May is permissive (see Shall).

010.014

"Mosquitoes" defined. "Mosquitoes" means insects belonging to the family *Culicidae*. Mosquitoes are vectors of diseases such as malaria and encephalitis viruses including West Nile Virus, St. Louis Encephalitis, and Western Equine Encephalomyelitis. In addition, they also cause great discomfort and misery by their bites.

010.016

"Midges" defined. "Midges" means insects belong to the order Diptera. Midges can arise in populations causing a nuisance and can also cause serious allergic reactions.

010.017

"Plan" defined. "Plan" has the meaning ascribed in ***NRS 278A.060***.

010.018

"Project Reports" defined. "Project Reports" means any initial studies, environmental assessments and related reports, proposals, or documents intended to set forth plans for the use or development of land or water resources and may include other planning documents.

010.020

"Public Health Hazard" includes any condition that may injure or endanger the safety or health of any person.

010.022

"Public Nuisances" defined. "Public Nuisances" have the meanings ascribed in ***NRS 202.450, 1, 3a.***

010.023

Shall is mandatory (see May).

010.024

"Vector" defined. "Vector" as used in this article, means any animal capable of transmitting the causative agent of human disease or capable of producing human discomfort or injury, including but not limited to, mosquitoes, flies, other insects, ticks, mites, and rats.

010.026

"Vector-Borne Disease" defined. "Vector-Borne Disease" means the etiologic agent of disease or abnormal condition that impairs the normal state of living that is transmitted from one animal to another.

010.028

"Vector-Borne Diseases Program" defined. "Vector-Borne Diseases Program" is a subdivision of the Environmental Health Services Division of the Washoe County District Health Department. The Vector-Borne Diseases Program provides community-wide service in the field of zoonotic and vector-borne diseases. These are diseases found in animals that can be transmitted to humans. Included are such diseases as plague, hantavirus, anthrax, mosquito-borne encephalitis, tick-borne diseases and rabies.

030. VECTOR-BORNE DISEASE DEVELOPMENT PLAN REVIEW PERMITTING - PROCEDURES

030.001

In order to provide an expeditious method for processing a plan or project report and to avoid delay and uncertainty it is hereby declared to be in the public interest

that all procedures with respect to the approval or disapproval of a plan or project report must be consistent with the provisions set out in sections 030.001 to 030.010, inclusive.

030.002

A plan or project report package must be filed for tentative approval by or on behalf of the landowner.

030.003

The plan or project report package submitted may include a tentative map or subdivision map and shall include a grading map. Tentative or subdivision map approval may not be granted until the map has been submitted for review and comment. Additionally, requests to review project reports as authorized by the city or county may require that a special use permit, variance and or limited advisory review, be submitted.

030.005

After review, the plan or project report may be granted tentative approval, granted tentative approval subject to specified conditions not included in the plan as submitted, or denied approval. The grant or denial of tentative approval must set forth the reasons for the grant or for the denial with or without conditions.

030.006

A plan or project report submitted for final approval or denial, must include a final map, including conditions, as were set forth in the in the tentative approval.

030.007

A plan which has been given final approval by the Health Authority shall be certified and recorded in accordance with ***NRS 278A.570.***

030.008

A decision to grant or deny approval of a plan or project report may be appealed for review before the District Board. The results of the District Board review shall serve as a final administrative decision.

030.010

A fee shall be charged for the review of project reports or plans in accordance with the current fee schedule adopted by the District Board. The property owner shall be ultimately responsible for submitting the appropriate fees prior to final approval of the project report.

040. STANDARDS FOR VECTOR-BORNE DISEASE PREVENTION IN PROPOSED DEVELOPMENTS

040.010

Design criteria

040.011

All ground surfaces shall be graded to drain into street gutters or storm drains to avoid ponding. Landscaped areas consisting of impermeable soils should be designed to prevent excessive summer run off.

040.012

All drainage shall flow into approved natural drains, flood control channels, or pipelines, or into storage basins designed to hold water for short periods of time.

040.013

Street gutter drop inlets and storm drains may provide sediment or trash collection devices that can keep the system open and operative. Drop inlets should also be designed to have no freestanding water, such as by low point out fall or use of a rock fill to a level slightly, above the outlet opening.

040.014

Subsurface utility vaults should not be used where high groundwater exists or where excessive surface water may enter enclosures.

040.015

Bottoms of subsurface utility vaults shall be self-draining such as by gravel fill or connection to a storm drain to prevent sprinkler or rain water from collecting. Tops of the vaults shall be enclosed to prevent entry of flying insects.

040.020

Flood Control Channels and Main Drains

040.021

If man made channels are to be lined with concrete or other suitable materials, channels shall be graded to prevent ponded areas.

040.022

Where concrete lining is not feasible, a comprehensive maintenance program over and above that required for lined channels should be provided to maintain weed-free low flow channels and proper grades.

040.023

Low flow channels, preferable "V" type, shall be provided within flood control facilities to concentrate and drain summer nuisance water flows.

040.024

Subsidence of large structures shall be anticipated and allowances made for future correction to invert elevations.

040.025

The Vector-Borne Diseases Program shall be consulted when proposed flood control or drainage facilities including detention or retention basins impact on its statutory responsibilities.

040.030

Reservoirs, Recreational Lakes, and Ponds

040.031

Reservoirs, recreational lakes, or other below ground-level water basins near populated areas, shall have a minimum of 3:1 side slopes, have banks lined to two feet below the water line with suitable materials such as rip rap, concrete, or clay, and have banks maintained to ensure permanent weed prevention. The Army Corp of Engineers may be consulted for coordination of proposed mitigation plans, applicant mitigation proposals, on mitigation projects for insect impacts under the regulatory program pursuant to Section 404 of the Clean Water Act and Section 10 of the Rivers and Harbors Act of 1899. The Truckee Meadows Regional Stormwater Quality Management Program Construction Site Best Management Practices Handbook shall also be utilized to provide for the prevention of pollution from stormwaters.

040.032

Ponds with raised embankments for storage of water or wastewater shall be lined with rip rap, concrete, or clay, or, if soil characteristics permit, have steep interior side slopes that will prevent emergent vegetation.

040.033

Water or wastewater impoundments may be any shape but should not contain small coves or shore irregularities where debris can accumulate.

040.034

Raised embankments shall have a levee road with a minimum width of ten feet and be adequately constructed to support maintenance vehicles.

040.035

Ponds and other man-made water impoundments shall be designed with graded bottoms and 3:1 side slopes so that all water can be removed by gravity or pumping for maintenance purposes.

040.036

Agricultural wastewater ponds used primarily for disposal of wash water from animal confinement areas (dairies, feedlots, etc.) shall contain presumps or solids

separators designed to adequately prevent most organic solids from reaching the impoundments.

040.037

Wastewater evaporation and infiltration systems shall have a minimum of one additional cell over and above the system's requirements in order to facilitate periodic draining, drying, cleaning, disking, and repair of other cells.

040.038

The use of reclaimed wastewater for irrigation, groundwater recharge, or other permitted uses shall be pursued to the extent that such use is an efficient use of water resources and prevent standing water.

040.040

Fresh Water Marsh

040.041

Marsh or other wetland restoration or fish and wildlife enhancement projects should provide for deeper ponds to serve as refuge for larvivorus fish, and ditches connecting these refuges for fish access when water levels rise or recede.

040.042

Shallow edged pond margins should be avoided.

040.043

Roadways of sufficient integrity shall be constructed to allow year round access to marsh lands for inspection or treatment vehicles to have access.

040.044

An easement for Vector-Borne Diseases staff access may be necessary to allow unimpeded inspection and treatment. In some areas, aerial avigation agreements may be required to indenture an easement.

040.050

Agriculture

040.051

Land grades, dictated by soil permeability and crop requirements, generally should have sufficient fall to prevent midfield ponding, especially in soils with high clay content.

040.052

Graded ditches shall be provided at low end of fields for drainage and proper management of tail water.

040.053

Tail water return systems or the capability to utilize tail water in other fields shall be incorporated, provided that the water quality is suitable for reuse in crop irrigation.

040.054

Irrigation ditches and pipelines shall contain means for draining after irrigation to prevent creation of breeding habitats within these facilities.

040.055

Projects for the disposal of wastewater on land shall contain provisions for land grading, rotating parcels, and drying and disking to prevent excessive weed growth and algae mats.

040.056

Projects calling for wastewater application to crops shall provide for adequate preparation of land, proper irrigation facilities, rotation of parcels, and strict water management.

040.057

Dairies, feedlots, and other mass animal confinement operations shall require sloped loafing and feeding corrals and drainage designed to remove water from all confinement areas, and to prevent standing water.

040.060

Operation and Maintenance Criteria

040.062

Flood control channels, canals, siphons, detention basins, etc., should be constructed and maintained in such a way that small nuisance water flows are not blocked by sand, silt, vegetation, or debris.

040.063

Water conveyance and storage systems shall include provisions for prompt attention to facility leakage and seepage creation and to prevent creation of water-logged areas.

040.064

Nonsewered, nonhazardous amounts of water from commercial or in industrial uses shall be adequately contained and disposed of to prevent ponding or the creation of conditions suitable for mosquito and / or midge breeding

040.065

Lakes, freshwater ponds, may be stocked with appropriate fish types that will prey on mosquito and midge larvae

040.066

Wastewater ponds should be kept free of debris, algae blooms, floating organic materials, and vegetation at waters edge.

040.069

Dairies, feedlots, and other mass animal confinement areas shall include programs for periodic solid waste removal to prevent odors, flies, and other vectors.

040.070

Mosquito prevention design requirements for project developments shall be considered in conjunction with the Vector-Borne Diseases Program.

040.071

Mosquito control costs directly attributed to noncompliance of the regulations governing the prevention of vector-borne diseases shall be borne by a project developer and or the property owner until the situation is corrected.

040.080

Terrestrial Vector and Rodent Prevention

040.081

Engineering review shall take into consideration the compatibility of developments when a potential for vector production exists and shall meet vector prevention requirements of the District Health Department.

040.082

Request for land use and zoning variances that may impact vector species production shall be reviewed by staff of the Vector-Borne Diseases Program and their recommendations shall be part of the condition for approval of the variance.

040.083

Underground utility service is recommended since it prevents roof rat access to buildings which otherwise occurs via service wires and cables, but must be constructed in such a manner as to prevent mosquito breeding.

040.084

In areas where sewer rat infestation is a problem, installation of sewer line gates or other devices designed to check upstream travel of rodents shall be considered.

040.085

It shall be the primary responsibility of a property owner or occupant operating an animal confinement facility to comply with standard operation, maintenance, and sanitation practices as required by local ordinance.

050. APPLICATION FOR VARIANCE

050.005

Any person who can not comply with these regulations may apply to the Environmental committee of the District Board of Health for a variance to the regulations.

050.010

The Variance Application must:

1. Include the non-refundable fee set by the District Board of Health,
2. Specify all the sections of these regulations for which a variance is requested and,
3. Have information required to enable the staff and hearing board members to consider adequately the request.

050.015

A request for a variance to the requirements of these regulations must be made in writing and a brief statement of the reason for requesting the variance and the section of the regulations include:

1. Section to be varied,
2. The location or proposed location of the property by public survey, and
3. The name and address of the property owner,
4. The street address, if there is no street address, a description of the location of the site, including but not limited to, common landmarks and cross-streets near the proposed site.
5. The county assessor's parcel number,
6. A brief description of the proposed design,
7. Any other information required pursuant to the provisions of this chapter.

060. UNLAWFUL ACTS AND PENALTIES

060.005

Any person who violates any provision of these regulations is guilty of a misdemeanor.

070. CIRCUMVENTION AND INTREPRETATION

070.005

Nothing contained herein shall be interpreted to circumvent these regulations to make them less effective.

070.010

If more than one (1) interpretation exists for a regulation, the more restrictive interpretation shall be followed.

080. SEVERABILITY

08.005

If any provision of these regulations or any application thereof to any person, thing, or circumstances shall be held invalid in a court of competent jurisdiction, such invalidity shall not affect the remaining provisions or applications to the extent that they can be given effect.

PLACEMENT

Regardless of the type of system, strategic placement of the aerators or diffusers is critical to insure the success of the aeration system. The size and shape of the lake or pond has a bearing on the size, number, and placement of the aerators.

Location of the aerators may, to some extent, be dictated by the proximity of the electrical power source. It is important from an operational standpoint to place aerators or diffusers as close to the control center or compressor. The further the aerators or diffusers are from the control center or compressor, the less energy they receive and the less efficient they will operate.

Assuming that power is readily available, the aerators should be strategically placed so that there is uniform circulation and aeration throughout the entire pond. It is always sound practice to break the horsepower requirement down into several smaller units which can be placed evenly in the basin. Many ponds have coves or inlets where the water may be still or stagnant. Aerators should be placed in those areas.
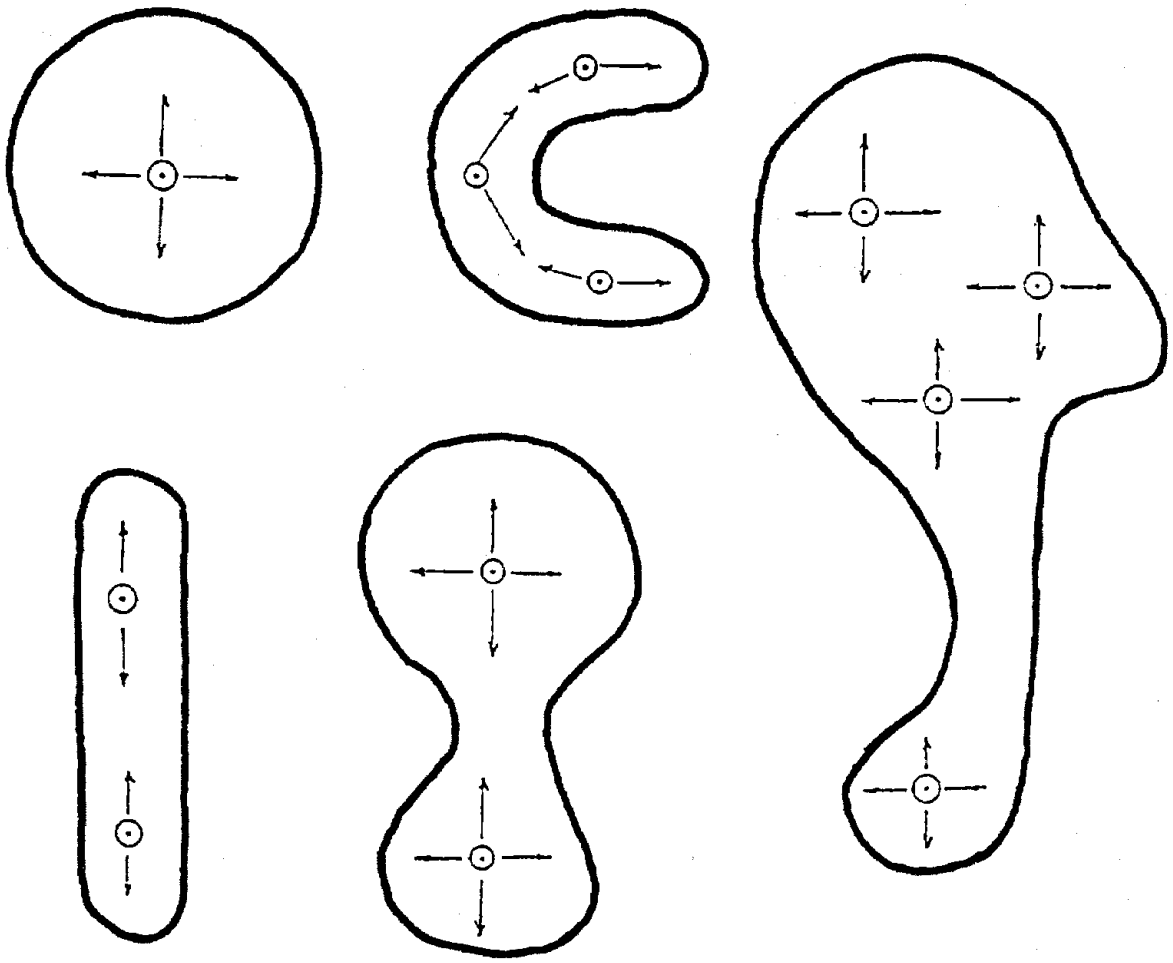
Should budgetary or power constraints restrict the number of aerators, placement becomes even more important. Place the aerators near the irrigation intake to insure trouble free operation of the irrigation system. Often algae and debris are blown to the windward side of the pond. Place the aerator there. It is always safe to place the aerator in the trouble spots of the pond.