FPUP# 07-017E P07 CP 00652

U.S. DEPARTMENT OF HOMELAND SECURITY
Federal Emergency Management Agency
National Flood Insurance Program

ELEVATION CERTIFICATE

Important: Read the instructions on pages 1-8.

OMB No. 1660-0008
Expires February 28, 2009

07 JUN 21 PM 2:32

SECTION A - PROPERTY INFORMATION

	For Insurance Company Use:
A1. Building Owner's Name **Phillips, Glenn**	Policy Number
A2. Building Street Address (including Apt., Unit, Suite, and/or Bldg. No.) or P.O. Route and Box No. **5255 N. Pomona**	Company NAIC Number

City **Tucson** State **AZ** ZIP Code **85704**

A3. Property Description (Lot and Block Numbers, Tax Parcel Number, Legal Description, etc.)
Tax Code 104-02-0410 Township 13S Range 13E Section 15 Riverside Terrace, Lot 50

A4. Building Use (e.g., Residential, Non-Residential, Addition, Accessory, etc.) **Accessory: Detached Garage**

A5. Latitude/Longitude: Lat. **32.3026** Long. **-111.0003** Horizontal Datum: ☐ NAD 1927 ☒ NAD 1983

A6. Attach at least 2 photographs of the building if the Certificate is being used to obtain flood insurance.

A7. Building Diagram Number **1**

A8. For a building with a crawl space or enclosure(s), provide:
a) Square footage of crawl space or enclosure(s) **N/A** sq ft
b) No. of permanent flood openings in the crawl space or enclosure(s) walls within 1.0 foot above adjacent grade **N/A**
c) Total net area of flood openings in A8.b **N/A** sq in

A9. For a building with an attached garage, provide:
a) Square footage of attached garage **1,200** sq ft
b) No. of permanent flood openings in the attached garage walls within 1.0 foot above adjacent grade **6**
c) Total net area of flood openings in A9.b ~~**672**~~ sq in

SEE COMMENTS IN SECTION D

SECTION B - FLOOD INSURANCE RATE MAP (FIRM) INFORMATION

B1. NFIP Community Name & Community Number	B2. County Name	B3. State
Pima County / 040073	**Pima County**	**AZ**

B4. Map/Panel Number	B5. Suffix	B6. FIRM Index Date	B7. FIRM Panel Effective/Revised Date	B8. Flood Zone(s)	B9. Base Flood Elevation(s) (Zone AO, use base flood depth)
04019C 1636	**K**	**2/8/99**	**7-25-2002/2-8-99**	**Shaded X**	**0.5**

B10. Indicate the source of the Base Flood Elevation (BFE) data or base flood depth entered in Item B9.
☐ FIS Profile ☒ FIRM ☐ Community Determined ☐ Other (Describe)

B11. Indicate elevation datum used for BFE in Item B9: ☐ NGVD 1929 ☐ NAVD 1988 ☒ Other (Describe) **Highest Adjacent Natural Grade**

B12. Is the building located in a Coastal Barrier Resources System (CBRS) area or Otherwise Protected Area (OPA)? ☐ Yes ☒ No
Designation Date **N/A** ☐ CBRS ☐ OPA

SECTION C - BUILDING ELEVATION INFORMATION (SURVEY REQUIRED)

C1. Building elevations are based on: ☐ Construction Drawings* ☐ Building Under Construction* ☒ Finished Construction
*A new Elevation Certificate will be required when construction of the building is complete.

C2. Elevations – Zones A1-A30, AE, AH, A (with BFE), VE, V1-V30, V (with BFE), AR, AR/A, AR/AE, AR/A1-A30, AR/AH, AR/AO. Complete Items C2.a-g below according to the building diagram specified in Item A7.
Benchmark Utilized **top of bottom floor = 100.00** Vertical Datum **local**
Conversion/Comments **N/A**

Check the measurement used.

a) Top of bottom floor (including basement, crawl space, or enclosure floor)	**100.00**	☒ feet	☐ meters (Puerto Rico only)
b) Top of the next higher floor	**N/A**	☒ feet	☐ meters (Puerto Rico only)
c) Bottom of the lowest horizontal structural member (V Zones only)	**N/A**	☒ feet	☐ meters (Puerto Rico only)
d) Attached garage (top of slab)	**N/A**	☒ feet	☐ meters (Puerto Rico only)
e) Lowest elevation of machinery or equipment servicing the building (Describe type of equipment in Comments)	**N/A**	☒ feet	☐ meters (Puerto Rico only)
f) Lowest adjacent (finished) grade (LAG)	**98.5**	☒ feet	☐ meters (Puerto Rico only)
g) Highest adjacent (finished) grade (HAG)	**99.5**	☒ feet	☐ meters (Puerto Rico only)

When B.9 is a depth, indicate highest and lowest NATURAL grade in Section D Comments

SECTION D - SURVEYOR, ENGINEER, OR ARCHITECT CERTIFICATION

This certification is to be signed and sealed by a land surveyor, engineer, or architect authorized by law to certify elevation information. *I certify that the information on this Certificate represents my best efforts to interpret the data available. I understand that any false statement may be punishable by fine or imprisonment under 18 U.S. Code, Section 1001.*

☒ Check here if comments are provided on back of form.

Registered Land Surveyor CERTIFICATE NO. 41603 JOHN DAVID REYES DATE SIGNED 6/19/07 ARIZONA U.S.A.

Certifier's Name **John David Reyes**		License Number **AZ RLS 41603**	
Title **Field Supervisor**	Company Name **Polaris land Surveying**		
Address **3528 N. Flowing Wells Rd.**	City **Tucson**	State **AZ**	ZIP Code **85705**
Signature	Date 6/19/07	Telephone **(520) 322-6400**	

FPUP# P0 CP

IMPORTANT: In these spaces, copy the corresponding information from Section A.			For Insurance Company Use:
Building Street Address (including Apt., Unit, Suite, and/or Bldg. No.) or P.O. Route and Box No. 5255 N. Pomona			Policy Number
City Tucson	State AZ	ZIP Code 85704	Company NAIC Number

SECTION D - SURVEYOR, ENGINEER, OR ARCHITECT CERTIFICATION (CONTINUED)

Copy both sides of this Elevation Certificate for (1) community official, (2) insurance agent/company, and (3) building owner.

Comments C2b) no next higher floor; C2c) no lowest horizontal structure, site built garage; C2d) The subject building is a garage.;

C2e) no machinery servicing building; The subject structure has six (6) "Smart Vents"(model #1540-570), three (3) in the left side and three (3) in the rear. This vent

is designed to provide 200 Sq. Ft. of hydrostatic relief, totalling 1,200 Sq. Ft. of relief. This vent meets requirements, as set forth by FEMA.

Signature Date 6/19/07 ☒ Check here if attachments

SECTION E - BUILDING ELEVATION INFORMATION (SURVEY NOT REQUIRED) FOR ZONE AO AND ZONE A (WITHOUT BFE)

For Zones AO and A (without BFE), complete Items E1-E5. If the Certificate is intended to support a LOMA or LOMR-F request, complete Sections A, B, and C. For Items E1-E4, use natural grade, if available. Check the measurement used. In Puerto Rico only, enter meters.

E1. Provide elevation information for the following and check the appropriate boxes to show whether the elevation is above or below the highest adjacent grade (HAG) and the lowest adjacent grade (LAG).
a) Top of bottom floor (including basement, crawl space, or enclosure) is _____. ____ ☐ feet ☐ meters ☐ above or ☐ below the HAG.
b) Top of bottom floor (including basement, crawl space, or enclosure) is _____. ____ ☐ feet ☐ meters ☐ above or ☐ below the LAG.

E2. For Building Diagrams 6-8 with permanent flood openings provided in Section A Items 8 and/or 9 (see page 8 of Instructions), the next higher floor (elevation C2.b in the diagrams) of the building is _____. ____ ☐ feet ☐ meters ☐ above or ☐ below the HAG.

E3. Attached garage (top of slab) is _____. ____ ☐ feet ☐ meters ☐ above or ☐ below the HAG.

E4. Top of platform of machinery and/or equipment servicing the building is _____. ____ ☐ feet ☐ meters ☐ above or ☐ below the HAG.

E5. Zone AO only: If no flood depth number is available, is the top of the bottom floor elevated in accordance with the community's floodplain management ordinance? ☐ Yes ☐ No ☐ Unknown. The local official must certify this information in Section G.

N/A

SECTION F - PROPERTY OWNER (OR OWNER'S REPRESENTATIVE) CERTIFICATION

The property owner or owner's authorized representative who completes Sections A, B, and E for Zone A (without a FEMA-issued or community-issued BFE) or Zone AO must sign here. *The statements in Sections A, B, and E are correct to the best of my knowledge.*

Property Owner's or Owner's Authorized Representative's Name

Address City State ZIP Code

Signature Date Telephone

Comments

☐ Check here if attachments

N/A

SECTION G - COMMUNITY INFORMATION (OPTIONAL)

The local official who is authorized by law or ordinance to administer the community's floodplain management ordinance can complete Sections A, B, C (or E), and G of this Elevation Certificate. Complete the applicable item(s) and sign below. Check the measurement used in Items G8. and G9.

G1. ☐ The information in Section C was taken from other documentation that has been signed and sealed by a licensed surveyor, engineer, or architect who is authorized by law to certify elevation information. (Indicate the source and date of the elevation data in the Comments area below.)

G2. ☐ A community official completed Section E for a building located in Zone A (without a FEMA-issued or community-issued BFE) or Zone AO.

G3. ☐ The following information (Items G4.-G9.) is provided for community floodplain management purposes.

G4. Permit Number FPUP#	G5. Date Permit Issued	G6. Date Certificate Of Compliance/Occupancy Issued

G7. This permit has been issued for: ☐ New Construction ☐ Substantial Improvement

G8. Elevation of as-built lowest floor (including basement) of the building: _____. ____ ☐ feet ☐ meters (PR) Datum_____

G9. BFE or (in Zone AO) depth of flooding at the building site: _____. ____ ☐ feet ☐ meters (PR) Datum_____

Local Official's Name Title

Community Name Telephone

Signature Date

Comments

☐ Check here if attachments

FPUP#

Building Photographs

See Instructions for Item A6.

Building Street Address (including Apt., Unit, Suite, and/or Bldg. No.) or P.O. Route and Box No.			For Insurance Company Use:
5255 N. Pomona			Policy Number
City Tucson	State AZ	ZIP Code 85704	Company NAIC Number

If using the Elevation Certificate to obtain NFIP flood insurance, affix at least two building photographs below according to the instructions for Item A6. Identify all photographs with: date taken; "Front View" and "Rear View"; and, if required, "Right Side View" and "Left Side View." If submitting more photographs than will fit on this page, use the Continuation Page, following.

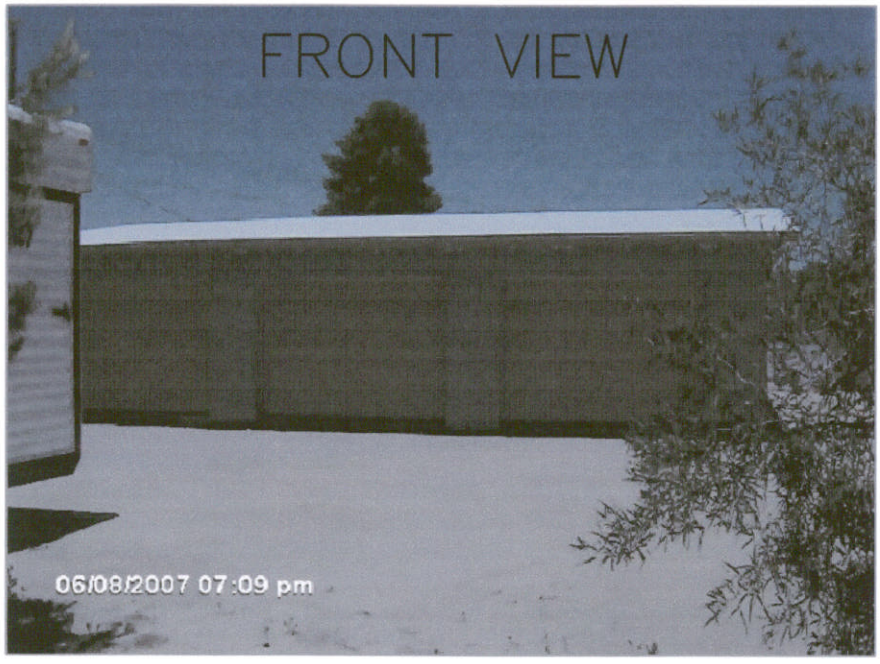

FPUP#

Building Photographs

Continuation Page

			For Insurance Company Use:
Building Street Address (including Apt., Unit, Suite, and/or Bldg. No.) or P.O. Route and Box No. 5255 N. Pomona			Policy Number
City Tucson	State AZ	ZIP Code 85704	Company NAIC Number

If submitting more photographs than will fit on the preceding page, affix the additional photographs below. Identify all photographs with: date taken; "Front View" and "Rear View"; and, if required, "Right Side View" and "Left Side View."

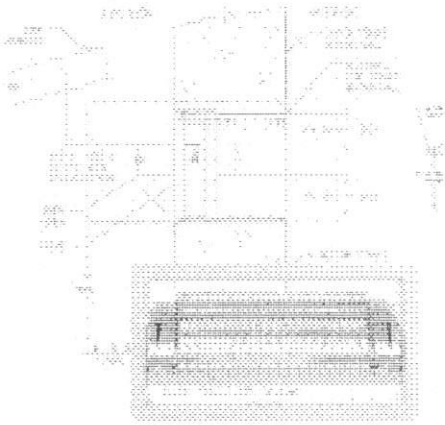

Codes:

Code Summary

FEMA NFIP Regulations: Section 44 CFR 60.3(c)(5)
International Code Council:
IRC: Chapter 3 Flood-Resistant Construction and Chapter 4 Under-Floor Spac
IBC: Section 1612 Flood Loads
American Society of Civil Engineers: ASCE 24-05 and ASCE 24-98 Flood F
Construction.
BOCA: Section 1210.0 Ventilation of Special Places; Section 3107.0 Flood Re

SMART VENT®

Go with the flow™

450 Andbro Drive, Suite 2B
Pitman, NJ 08071

MATERIAL REVIEW & MAINTENANCE INSTRUCTIONS

Objective:
When we set out to design our flood vent products a comprehensive study was conducted to determine the most important design attributes that would be needed to insure that our customers received the best product available. Because our company started on the shores of the East Coast of New Jersey, everyone placed durability as their number one concern.

Durability:
After extensive research, including review of many less expensive materials, we choose to make the bulk of the components for our vent from stainless steel. Salt will pit stainless steel unless it is rinsed with water. We recommend that the vent be washed with fresh water two times a year. Any red rust or minor surface pitting can be removed with "Commercial "de-rusting" solutions".

The mechanism that operates the automatic louvers on models 1540-510, 1540-511, 1540-514 and 1540-550 is also entirely made from stainless steel, and water rinsing will reduce corrosion and dirt buildup. Prior to final inspection and testing, the louver mechanism is lubricated with a dry film lubricant. This over the counter lubricant should be applied at minimum one time per year, or when needed. Rinse the louver mechanism, let dry, then spray all of the moving parts. Note: Wet lubricants or grease will allow dirt and sand to accumulate on the moving parts, use only dry film lubricants.

The Bi-metal coil is made from highly engineered materials. The composite contains a large portion of Nickel and the finished coil is secondarily heat-treated, which forms a protective barrier to protect it from the elements. A squirt of dry film lubricant into the coil chamber during maintenance will extend its life.

The Floats are manufactured from engineered plastics. An ultra-violet inhibitor was blended into the raw material before molding to insure that the sun does not degrade the functional or dimensional characteristics of the material. Insert a thin blade or a credit card into each side of the vent door's float slot, and the door will easily push open. Rinse the float cavity, then apply a small amount of dry film lubricant on the float, where it contacts the frame.

Like any product, the care one gives will determine its life. We have used the best American materials, along with the best engineering and manufacturing people to build our products. With just a little care, your vents will function carefree for many, many years.

Sales, Customer Service, and Technical Assistance
Toll Free: 877.441.8368.
Fax: 856.612.5000
Email: sales@smartvent.com

World Wide Web
www.smartvent.com

Email: info@smartvent.com

SMART VENT®

Go with the flow™

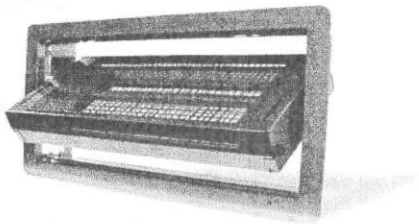

450 Andbro Dr Suite 2B Pitman, NJ 08071

ONE YEAR LIMITED WARRANTY
LIMITED, NON-PRORATED AND TRANSFERABLE

Any and all product(s) as manufactured by SmartVENT® are subject to a one year limited warranty in accordance with the following, provided that the products covered by this warranty have been installed in strict accordance with the SmartVENT® written installation instructions and in accordance with all local codes and standards. Cleaning and lubrication may be required, and is not covered by this warranty. SmartVENT® warrants to the original purchaser or a subsequent owner of the property that parts are free from manufacturing defects for 1 (One) year from the date of purchase.

Should any defect occur during the one-year period following the date of purchase, SmartVENT® will provide a replacement for that part deemed to be defective (but not including labor costs incurred in removing the part, installing the replacement part, or shipping.

In the event of replacement according to the terms of this warranty, the warranty on the replacement part will extend for the balance of the original warranty period, which is in effect at the time the part proves defective.

LIMITATIONS

SmartVENT® shall not be liable for, and this warranty does not apply to, any failure, defect or damage resulting from or connected with painting, misuse, abuse, neglect or improper handling or storage, or installation not in strict adherence to SmartVENT® written instructions. SmartVENT® reserves the right to discontinue or modify any of its products, including color, and shall not be liable as a result of such discontinuance or modification. If SmartVENT® replaces any part under this warranty, it may substitute parts designated by SmartVENT® to be of comparable quality or price range in the event the product initially installed has been discontinued or modified.

OTHER CONDITIONS

THIS WARRANTY IS EXPRESSLY IN LIEU OF ALL OTHER ORAL OR WRITTEN WARRANTIES, LIABILITIES OR OBLIGATIONS OF SMARTVENT. PERTINENT STATE LAW SHALL CONTROL FOR WHAT PERIOD OF TIME SUBSEQUENT TO SALE A CONSUMER/HOMEOWNER MAY SEEK A REMEDY PURSUANT TO THE IMPLIED WARRANTY OF MERCHANTABILITY OR FITNESS FOR A PARTICULAR PURPOSE. IN NO EVENT SHALL SMARTVENT® BE LIABLE FOR CONSEQUENTIAL OR INCIDENTAL DAMAGES OF ANY KIND, INCLUDING ANY DAMAGE TO THE BUILDING, ITS CONTENTS OR ANY PERSONS THEREIN, RESULTING FROM THE BREACH OF ANY WARRANTY SET FORTH HEREIN. NO REPRESENTATIVE OF SMARTVENT® OR ITS DISTRIBUTORS OR DEALERS IS AUTHORIZED TO MAKE ANY CHANGE OR MODIFICATION TO THIS WARRANTY.

Smart VENT
877- 441- 8368
www.smartvent.com

DETAIL DIAGRAM
MODEL 1540-570

14.5" WOOD WALL INSULATED

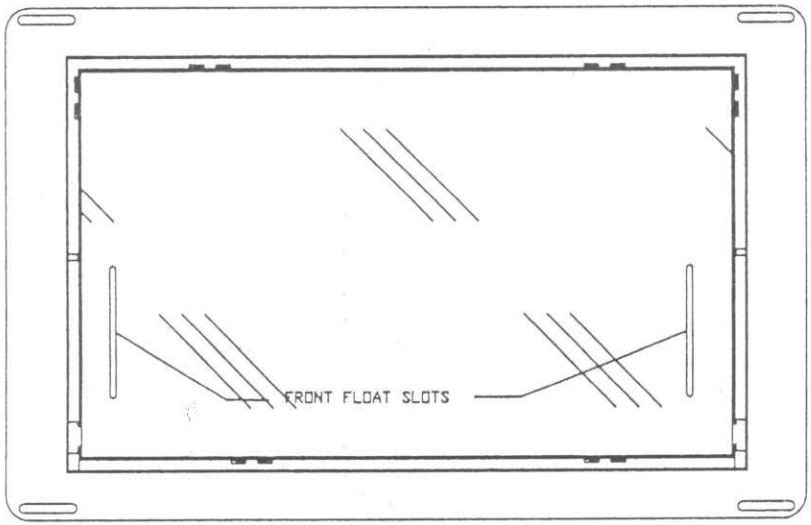

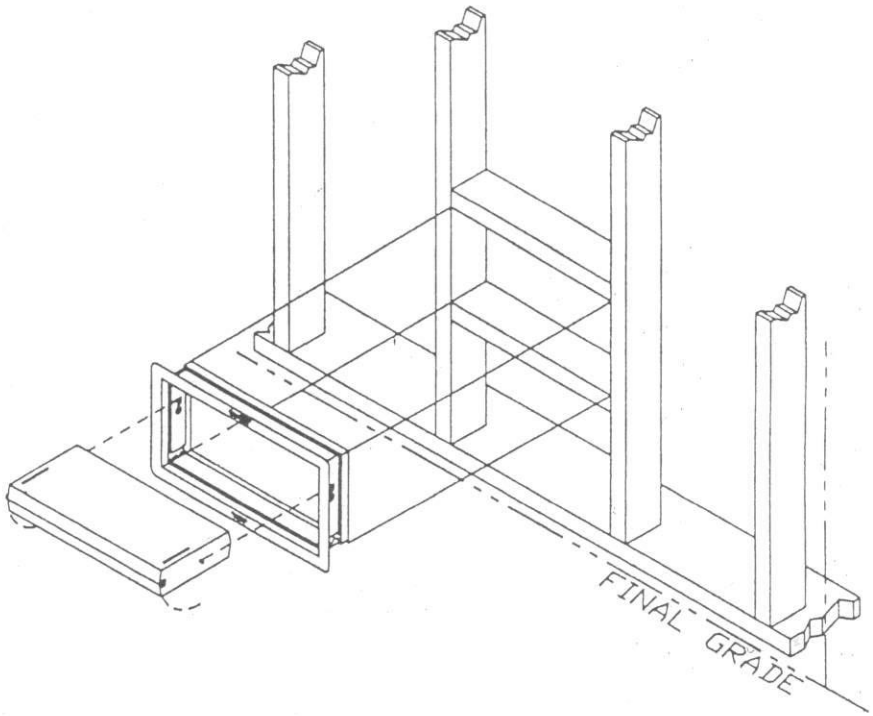

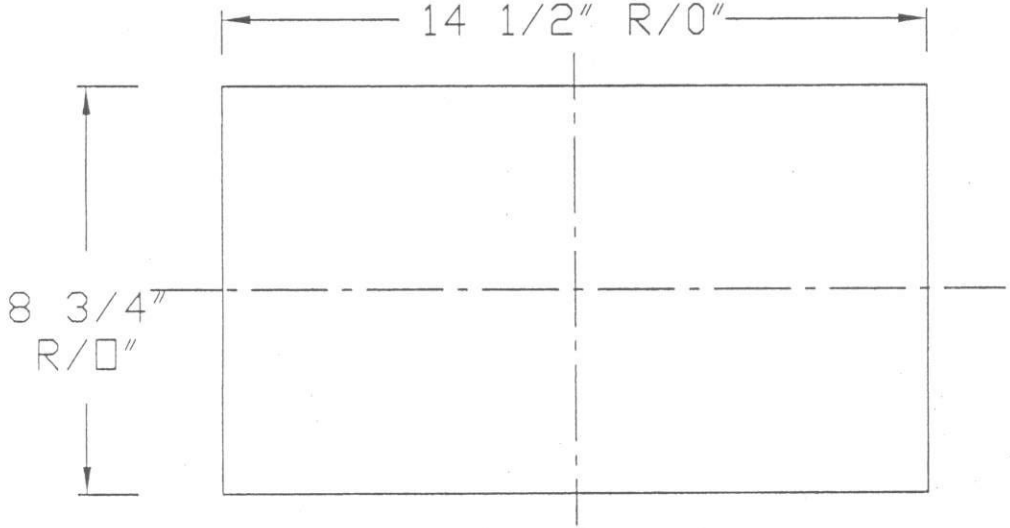

ROUGH OPENING DIAGRAM
DESIGNED TO FIT BETWEEN 2 BI WOOD STUDS

TOLERANCES UNLESS OTHERWISE SPECIFIED X.X +/-0.06 X.XX +/-0.03 X.XXX +/-0.005	Smart VENT® 877-441 8368 WWW.SMARTVENT.COM	Smart VENT Foundation Flood Vents 450 AndBro Dr. Pitman NJ 08071 14.5" WOOD WALL INSULATED MODEL 1540-570
THE INFORMATION CONTAINED IN THIS DRAWING IS THE SOLE PROPERTY OF SMART VENT INC. ANY REPRODUCTION OR USE OF THIS INFORMATION WITHOUT THE WRITTEN PERMISSION OF SARGENT METAL FABRICATORS IS PROHIBITED.	SIZE A DWG NO. 1540-570 REV A DATE 1-18-06 SHEET 1 OF 2	

Smart VENT
877- 441- 8368
www.smartvent.com

INSTALLATION INSTRUCTIONS & DETAILS MODEL 1540-570

14.5" WOOD WALL INSULATED

REV. 1-12-05

INSTALLATION INSTRUCTIONS
(SEE DIAGRAM ON BACK PAGE 1 OF 2)

1. For each vent cut a CLEAN, SQUARE, and LEVEL 14 1/2"x 8 3/4" opening in the outside sheathing. Ensure that the bottom of the opening is no more than 12" above the outside final grade.
2. Remove Vent door from Vent frame. (turn upside down, rotate bottom of door outward and slide out of frame slots)
3. Position the vent frame in the opening with SERIAL NUMBER LABEL on the BOTTOM and ensure that it is square and level. Apply a small bead of polyurethane adhesive behind the vent front frame as shown in the diagram.
4. Use 4 each flathead stainless steel screws to secure the frame through the sheathing and into the structural member.
5. Install the door by inserting the side pins into the tracks at the sides of the vent frame. Ensure the black float pins are facing downward.
9. Let the bottom of the Vent door go so that it rotates down into the Vent frame. Check that Vent door is latched on both sides.
10. To open the door insert 2 credit cards into the float slots as shown in the diagram.
11. The outside flange and screws can be covered with "J" channel or any surface treatment like brick or stone. Use CAUTION do not apply any covering that will impede the movement of the vent door in any direction.

DETAIL SPECIFICATIONS:
MATERIAL: TYPE 316 STAINLESS STEEL
OPERATION: AUTOMATIC NON-POWERED ACTIVATION AND OPERATION
VENT REMAINS CLOSED AND LOCKED UNTIL ACTIVATED
INSTALLATION:
SECURED W/ 4 STAINLESS STEEL FLATHEAD SCREWS

HYDROSTATIC RELIEF: 200 Sq. Ft per Vent
REQUIREMENTS: MINIMUM OF 2 VENTS PER ENCLOSED AREA
MOUNTED ON OPPOSITE OR ADJACENT WALLS
COLORS: WHITE (STANDARD)
STAINLESS STEEL, TAN, GRAY, AND RUST (AVAILABLE)

MEETS THE REQUIREMENTS FOR ENGINEERED OPENINGS AS SET FORTH BY:
FEMA, NFIP, ICC, & ASCE
SUPPORTIVE DOCUMENTS, TB 1-93, 44CFR 60.3(C)(5), ASCE 24-98
ICC EVALUATION # NER-624